Workshop Manual

Amarok 2011 ➤ , Amarok 2017 ➤ ,
Ameo 2017 ➤ , Arteon 2018 ➤ ,
Atlas 2017 ➤ , Beetle 2012 ➤ ,
Bora 1999 ➤ , CC 2010 ➤ , CC 2012 ➤ ,
Caddy 1997 ➤ , Caddy 2004 ➤ ,
Caddy 2011 ➤ , Caddy 2016 ➤ ,
Caddy Kasten/Kombi 1996 ➤ ,
Caddy Pickup 1997 ➤ ,
California 2004 ➤ , California 2010 ➤ ,
Caravelle 2004 ➤ , Caravelle 2010 ➤ ,
Crafter 2006 ➤ , Crafter 2017 ➤ ,
Crafter Grand California 2020 ➤ ,
Eos 2006 ➤ , Fox 2005 ➤ , Golf 1992 ➤ ,
Golf 1998 ➤ , Golf 2004 ➤ ,
Golf 2009 ➤ , Golf 2013 ➤ ,
Golf 2015 ➤ , Golf 2016 ➤ ,
Golf 2017 ➤ , Golf Cabriolet 2012 ➤ ,
Golf MEX 2018 ➤ , Golf Plus 2005 ➤ ,
Golf Plus 2009 ➤ ,
Golf Sportsvan 2015 ➤ ,
Golf Sportsvan 2018 ➤ ,
Golf Variant 1998 ➤ ,
Golf Variant 2007 ➤ ,
Golf Variant 2010 ➤ ,
Golf Variant 2014 ➤ ,
Golf Variant 2015 ➤ ,
Golf Variant 2017 ➤ , Jetta 2005 ➤ ,
Jetta 2011 ➤ , Jetta 2013 ➤ ,
Jetta 2015 ➤ , Jetta 2018 ➤ ,
LT 1997 ➤ , Lupo 1999 ➤ ,

Protected by copyright. Copyright by Volkswagen AG.
Published by Volkswagen AG, Volkswagen AG does not guarantee or accept any liability with respect to the correctness of information in this document.
satelettronica

Lupo 3L 1999 ➤ , Multivan 2004 ➤ ,
Multivan 2010 ➤ , New Beetle 1999 ➤ ,
New Beetle Cabrio 2003 ➤ ,
Passat 1994 ➤ , Passat 1997 ➤ ,
Passat 2006 ➤ , Passat 2011 ➤ ,
Passat 2015 ➤ ,
Passat (NMS - US) 2012 ➤ ,
Passat (NMS - US) 2016 ➤ ,
Passat CC 2009 ➤ ,
Passat Variant 1997 ➤ ,
Passat Variant 2011 ➤ ,
Passat Variant 2015 ➤ , Phaeton 2003 ➤ ,
Polo 1995 ➤ , Polo 2002 ➤ ,
Polo 2010 ➤ , Polo 2014 ➤ ,
Polo 2018 ➤ , Polo Classic 1996 ➤ ,
Polo KH IN 2010 ➤ , Polo KH IN 2015 ➤ ,
Polo KH MY 2014 ➤ ,
Polo KH MY 2015 ➤ ,
Polo Lim IN 2011 ➤ ,
Polo Lim IN 2016 ➤ ,
Polo Lim MY 2014 ➤ ,
Polo Lim MY 2016 ➤ ,
Polo Lim RUS 2011 ➤ ,
Polo Lim RUS 2016 ➤ ,
Polo Variant 1998 ➤ , Scirocco 2009 ➤ ,
Scirocco 2015 ➤ , Sharan 1996 ➤ ,
Sharan 2011 ➤ , Sharan 2016 ➤ ,
T-Cross 2019 ➤ , T-Roc 2018 ➤ ,
TGE 2017 ➤ , The Beetle 2017 ➤ ,
The Beetle Cabriolet 2012 ➤ ,
The Beetle Cabriolet 2017 ➤ ,
Tiguan 2008 ➤ , Tiguan MEX 2017 ➤ ,

satelettronica

Tiguan RUS 2017 ➤ , Touareg 2003 ➤ , Touareg 2010 ➤ , Touareg 2015 ➤ , Touareg 2018 ➤ , Touran 2003 ➤ , Touran 2016 ➤ , Transporter 1996 ➤ , Transporter 2003 ➤ , Transporter 2004 ➤ , Transporter 2010 ➤ , Transporter 2016 ➤ , Transporter 2020 ➤ , XL1 2015 ➤ , e-Crafter 2019 ➤ , e-Golf 2014 ➤ , e-TGE 2019 ➤ , e-up! 2014 ➤ , up! 2012 ➤ , up! 2017 ➤

Air conditioning systems with refrigerant R134a - General information

Edition 11.2019

Protected by copyright. Copying for private or commercial purposes, in part or in whole, is not permitted unless authorised by Volkswagen AG. Volkswagen AG does not guarantee or accept any liability with respect to the correctness of information in this document. Copyright by Volkswagen AG.

satelettronica

List of Workshop Manual Repair Groups

Repair Group

00 - Technical data

Copyright. Copying for private or commercial purposes, in part or in whole, is not permitted unless authorised by Volkswagen AG. Volkswagen AG does not guarantee or accept any liability with respect to the correctness of information in this document.

Technical information should always be available to the foremen and mechanics, because their careful and constant adherence to the instructions is essential to ensure vehicle road-worthiness and safety. In addition, the normal basic safety precautions for working on motor vehicles must, as a matter of course, be observed.

All rights reserved.
No reproduction without prior agreement from publisher.

Copyright © 2019 Volkswagen AG, Wolfsburg

D4B8027068B

satelettronica

Protected by copyright. Copying for private or commercial purposes, in part or in whole, is not permitted unless authorised by Volkswagen AG. Volkswagen AG does not guarantee or accept any liability with respect to the correctness of information in this document. Copyright by Volkswagen AG.

Contents

00 - Technical data 1

1 **Safety information** 1
1.1 Safety precautions when working on air conditioning systems 1
1.2 Safety precautions when working on a high-voltage system 1
1.3 Safety precautions when working in the vicinity of high-voltage components 2
1.4 Safety precautions when tow-starting or towing 2

2 **Repair notes** 4
2.1 Rules for cleanliness when working on high-voltage system 4

3 **Hazard classification of high-voltage system** 5

4 **General information on air conditioning** 6
4.1 Other reference material 6
4.2 Basics of air conditioning technology 6
4.3 Vapour pressure table for refrigerant R134a 7
4.4 Refrigerant R134a 8
4.5 Properties of refrigerant R134a 9
4.6 Refrigerant oil 11
4.7 Comfort 13
4.8 How air conditioning works 13
4.9 General work safety 14
4.10 Safety measures when working on vehicles with air conditioning and when working with refrigerant R134a 17
4.11 Basics for working on refrigerant circuit 18

5 **General information on refrigerant circuit** 21
5.1 Components of refrigerant circuit 21
5.2 Design of refrigerant circuit 29
5.3 Evacuation and charging valves for quick-release couplings of air conditioner service station on refrigerant circuit 30
5.4 Switches and senders in refrigerant circuit and related connections 32
5.5 Electrical components not installed in refrigerant circuit 35
5.6 Pressures and temperatures in refrigerant circuit 36
5.7 Refrigerant circuit with expansion valve 37
5.8 Refrigerant circuit with restrictor and reservoir 38
5.9 Test and measurement work that can be performed using a pressure gauge 40
5.10 Air conditioner service and recycling equipment 41
5.11 Notes to repairs on refrigerant circuit 42

6 **Legal texts and regulations** 43
6.1 Laws and regulations 43
6.2 Recycling and refuse law 47
6.3 Converting R12 refrigerant circuits to R134a refrigerant circuits and repairing them (retrofitting) 49
6.4 Maintaining records on refrigerant 49

7 **Refrigerant circuit** 50
7.1 Important repair notes on air conditioning 50
7.2 Converting refrigerant circuits from R12 refrigerant to R134a 50

8 **Working with the air conditioner service station** 51
8.1 Important instructions for working with the air conditioner service station 51
8.2 Connecting a air conditioner service station for measuring and testing 52
8.3 Drain the refrigerant circuit using the air conditioner service station 53
8.4 Evacuating refrigerant circuit using air conditioner service station 53
8.5 Filling refrigerant circuit with air conditioner service station 54
8.6 Bringing air conditioning system into service after charging 55
8.7 Charging the container in the air conditioning service station with refrigerant 56

satelettronica

8.8 Emptying air conditioner service station . . . 56
9 Detecting leaks in refrigerant circuit . . . 57
9.1 Leak detection in refrigerant circuit using compressed air or nitrogen . . . 58
9.2 Searching for leaks in refrigerant circuits using leak detector V.A.G 1796 . . . 60
9.3 Detecting leaks in refrigerant circuit using leak detecting system VAS 6196 or leak detecting system VAS 6201 or a later model . . . 60
10 Clearing refrigerant circuit of contaminants . . . 67
10.1 Vehicles with high-voltage system (hybrid vehicles) . . . 67
10.2 Blowing through refrigerant circuit with compressed air and nitrogen . . . 68
10.3 Flushing refrigerant circuit with refrigerant R134a . . . 70
11 Clearing refrigerant circuit of contaminants, commercial vehicles . . . 100
11.1 Vehicles with high-voltage system . . . 100
11.2 Flushing refrigerant circuit with refrigerant R134a . . . 101
11.3 Adapters for setting up flushing circuits . . . 102
11.4 Procedure for setting up and flushing refrigerant circuit, Amarok 2010 ► . . . 105
11.5 Procedure for setting up and flushing refrigerant circuit, Caddy 2004 ► . . . 110
11.6 Procedure for setting up and flushing refrigerant circuit, Crafter ►2017 . . . 117
11.7 Procedure for setting up and flushing refrigerant circuit, Crafter 2017 ► or MAN TGE ►, Crafter Grand California ► . . . 130
11.8 Procedure for setting up and flushing refrigerant circuit, Transporter 2016 ►, Transporter 2020 ► . . . 143
12 Complaints . . . 156
12.1 Possible complaints about refrigerant circuit . . . 156
12.2 Odours from heater and air conditioner unit . . . 157
13 Connecting the air conditioning service station . . . 160
13.1 For vehicles that have connections on both low-pressure and high-pressure sides of refrigerant circuit . . . 160
14 Checking pressures on vehicles . . . 161
14.1 Checking pressures in the refrigerant circuit (using a air conditioning service station) . . . 161
14.2 Checking systems with a restrictor and collector (with internally regulated air conditioner compressor) . . . 165
14.3 Checking systems with an expansion valve and reservoir (with internally regulated air conditioner compressor) . . . 169
14.4 Checking systems with an expansion valve and reservoir (without regulated air conditioner compressor) . . . 173
14.5 Checking systems with a restrictor and reservoir and air conditioner compressor regulating valve N280 (with externally regulated air conditioner compressor) . . . 174
14.6 Checking systems with an expansion valve, receiver and air conditioner compressor regulating valve N280 (with externally regulated air conditioner compressor) . . . 180
14.7 With expansion valve, receiver and electrical air conditioner compressor . . . 190
15 Renewing components . . . 191
15.1 In the event of leaking or damaged components (apart from the air conditioner compressor, receiver or reservoir) . . . 192
15.2 Renew the air conditioner compressor . . . 194
15.3 Replace receiver or reservoir and restrictor . . . 196
16 Testing equipment and tools . . . 199
16.1 List of test equipment, tools and materials . . . 199

Per copyright by Volkswagen AG. Volkswagen AG does not guarantee or accept any liability with respect to the correctness of information in this document. Copyright by Volkswagen AG. Copying for private or commercial purposes, in part or in whole, is not permitted unless authorised by Volkswagen AG.
satelettronica

00 – Technical data

1 Safety information

(VRL013671; Edition 11.2019)

⇒ “1.1 Safety precautions when working on air conditioning systems”, page 1

⇒ “1.2 Safety precautions when working on a high-voltage system”, page 1

⇒ “1.3 Safety precautions when working in the vicinity of high-voltage components”, page 2

⇒ “1.4 Safety precautions when tow-starting or towing”, page 2

1.1 Safety precautions when working on air conditioning systems

Risk of freezing injury from refrigerant

When working on the air conditioning system, there is a risk of highly pressurised refrigerant escaping from the system. There is a risk of injury to the skin and parts of the body due to freezing.

– Wear protective gloves.

– Wear safety goggles.

– Extract refrigerant and open the refrigerant circuit immediately afterwards.

– If more than 10 minutes have passed since the refrigerant was extracted, repeat the extraction process before opening the refrigerant circuit. Pressure could build up in the refrigerant circuit from continued evaporation.

Risk of damage to refrigerant lines

There is a risk of damage to the refrigerant lines due to rupture of the inner foil.

– Never bend refrigerant lines to a radius less than 100 mm.

1.2 Safety precautions when working on a high-voltage system

Danger to life from high voltage

The high-voltage system is under high voltage. Severe or fatal injury from electric shock.

– Persons with life-preserving or other electronic medical devices in or on their body must not perform any work on the high-voltage system. Such medical devices include internal analgesic pumps, implanted defibrillators, pacemakers, insulin pumps and hearing aids.

– The high-voltage system must be de-energised by a suitably qualified technician.

Protected by copyright. Copying for private or commercial purposes, in part or in whole, is not permitted unless authorised by Volkswagen AG. Volkswagen AG does not guarantee or accept any liability with respect to the correctness of information in this document. Copyright by Volkswagen AG.
sateletronica

Risk of injury from engine starting unexpectedly

On electric and hybrid vehicles, the operational readiness of the vehicle is difficult to detect. There is a risk of parts of the body becoming trapped or drawn in.

– Switch off ignition.

– Always store the ignition key outside the vehicle.

Risk of damage to high-voltage cables

Improper handling of high-voltage cables or high-voltage connectors may result in damage to their insulation.

– Never support body weight on high-voltage cables or high-voltage connectors.

– Never support any tools on high-voltage cables or high-voltage connectors.

– Never kink or severely bend high-voltage cables.

– Always observe the coding when connecting high-voltage connectors.

Risk of injury from activated stationary air conditioning

On electric and hybrid vehicles with active stationary air conditioning, the stationary air conditioning could switch on unintentionally. Risk of limbs becoming trapped or drawn in by the radiator fan starting automatically.

– Deactivate the stationary air conditioning.

1.3 Safety precautions when working in the vicinity of high-voltage components

Danger to life from high voltage

The high-voltage system is under high voltage. Damage to high-voltage components can result in severe or fatal injury from electric shock.

– Perform visual check of high-voltage components and high-voltage cables.

– Never use cutting or forming tools, or any other sharp-edged tools.

– Never use heat sources such as welding, brazing, soldering, hot air or thermal bonding equipment.

1.4 Safety precautions when tow-starting or towing

This vehicle is electrified by ABT e-Line.

All relevant repair and maintenance information regarding modifications by ABT e-Line are available in the Electronic Service Information System (ElsaPro), section “Superstructures and modifications”. These can also be obtained from ABT e-Line.

Protected by copyright. Copyright by Volkswagen AG. Volkswagen AG does not guarantee or accept any liability with respect to the correctness of information in this document. Copyright by Volkswagen AG. Reproduction, in part or in whole, is not permitted without the express authorised by Volkswagen AG.
satelettronica

This vehicle is electrified by ABT e-Line.

This manual may have lost its validity due to modifications by ABT e-Line, or may have to be supplemented by additional repair instructions from ABT e-Line.

Please refer to the Electronic Service Information System (ElsaPro), section “Superstructures and modifications” for relevant repair manuals regarding modifications by ABT e-Line.

These can also be obtained from ABT e-Line.

Protected by copyright. Copying for private or commercial purposes, in part or in whole, is not permitted unless authorised by Volkswagen AG. Volkswagen AG does not guarantee or accept any liability with respect to the correctness of information in this document. Copyright by Volkswagen AG.

satelettronica

2 Repair notes

⇒ “2.1 Rules for cleanliness when working on high-voltage system”, page 4

2.1 Rules for cleanliness when working on high-voltage system

This vehicle is electrified by ABT e-Line.

All relevant repair and maintenance information regarding modifications by ABT e-Line are available in the Electronic Service Information System (ElsaPro), section “Superstructures and modifications”. These can also be obtained from ABT e-Line.

This vehicle is electrified by ABT e-Line.

This manual may have lost its validity due to modifications by ABT e-Line, or may have to be supplemented by additional repair instructions from ABT e-Line.

Please refer to the Electronic Service Information System (ElsaPro), section “Superstructures and modifications” for relevant repair manuals regarding modifications by ABT e-Line.

These can also be obtained from ABT e-Line.

Protected by copyright. Copying for private or commercial purposes, in part or in whole, is not permitted unless authorised by Volkswagen AG. Volkswagen AG does not guarantee or accept any liability with respect to the correctness of information in this document. Copyright by Volkswagen AG.

satelettronica

3 Hazard classification of high-voltage system

DANGER

The vehicle's high-voltage system and high-voltage battery are dangerous and can cause burns or other injuries and even lead to a fatal electric shock.

- **Any work on the high-voltage system, or on systems which could be indirectly affected by it, may only be carried out by properly trained and qualified expert personnel.**
- **If there are any questions or there is any doubt regarding the terms "high-voltage technician" or "high-voltage expert", likewise if there are any questions about the high-voltage system, the responsible importer must be contacted before starting any work.**
- **Any repair work must be performed in accordance with applicable laws and regulations, approved engineering practices, any relevant accident prevention regulations (in Germany, including but not limited to the BGI/GUV-I 8686 – Training for work on vehicles with high-voltage systems), as well as this workshop manual.**

This vehicle is electrified by ABT e-Line.

All relevant repair and maintenance information regarding modifications by ABT e-Line are available in the Electronic Service Information System (ElsaPro), section "Superstructures and modifications". These can also be obtained from ABT e-Line.

Copyright by Volkswagen AG. Volkswagen AG does not guarantee or accept any liability with respect to the correctness of information in this document. Copying for private or commercial purposes, in part or in whole, is not permitted unless authorised by Volkswagen AG.

satelettronica

Protected copyright. Copyright by Volkswagen AG. Volkswagen AG does not guarantee or accept any liability with respect to the correctness of information in this document. Copyright by Volkswagen AG. Commercial reproduction or in whole, is not permitted unless authorised by Volkswagen AG.

4 General information on air conditioning

4.1 Other reference material

- Technical Service Handbook with measures for rectifying latest malfunctions.
- Workshop manual for service work specific to model ⇒ Heating, air conditioning; Rep. gr. 87 .
- ⇒ Current flow diagrams, Electrical fault finding and Fitting locations
- Catalogue of special tools / workshop testing.
- Workshop manual for air conditioning system with R12 refrigerant (for vehicles that were manufactured up to model year 1993). This workshop manual is only available as a hard copy.

4.2 Basics of air conditioning technology

4.2.1 Physical principles:

The four familiar states of water apply to air conditioning refrigerants as well.

1 - Gas (invisible)

2 - Vapour

3 - Liquid

4 - Solid

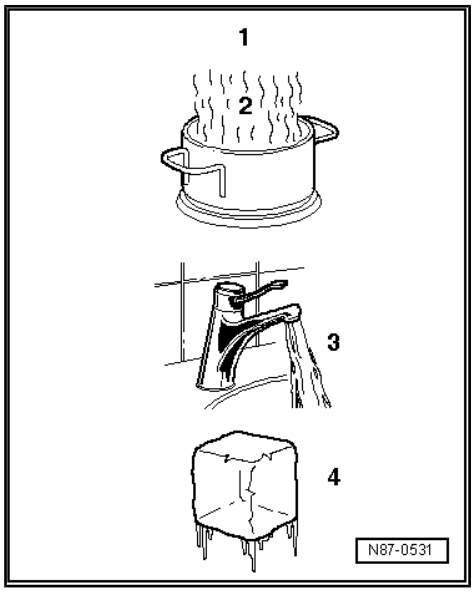

When water is heated in a vessel (heat absorption), water vapour can be seen to rise. If the vapour is heated by further heat absorption, the visible vapour becomes invisible gas. The process is reversible. If heat is extracted from gaseous water, it changes first to vapour, then to water and finally to ice.

A - Heat absorption

B - Heat dissipation

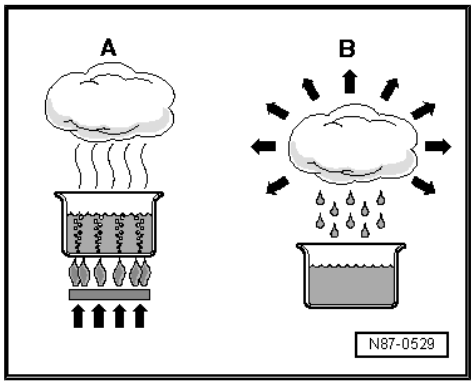

satelettronica

4.2.2 Heat always flows from a warmer to a colder substance

Every substance consists of a mass of moving molecules. The fast moving molecules of a warmer substance give off some of their energy to the cooler and thus slower molecules. This causes the molecular movement in the warmer material to slow down, and that in the colder material to speed up. This continues until the molecules in both materials are moving at the same speed. They are then at the same temperature and no further heat exchange takes place.

4.2.3 Pressure and boiling point

The boiling point given in tables for a liquid is always referenced to an atmospheric pressure of 1 bar. If the pressure over a fluid changes, its boiling point changes as well.

It is well known that, for example, the lower the pressure, the lower the temperature at which water boils.

The vapour pressure curves for water and for refrigerant R134a show that at constant pressure and falling temperature the vapour becomes liquid (in the condenser), and that when pressure drops, the refrigerant changes from liquid into the vapour state (evaporator).

Vapour curve, water

A - Liquid

B - Gaseous

C - Vapour curve, water

1 - Pressure on the liquid in bar (absolute)

2 - Temperature in °C

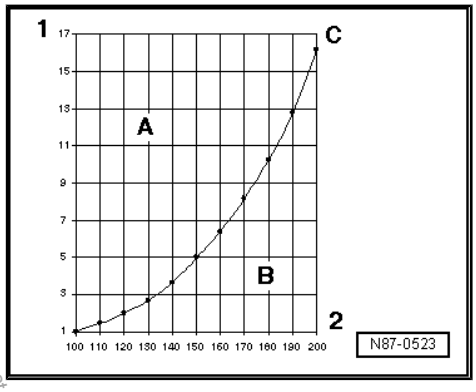

Vapour pressure curve for refrigerant R134a

A - Liquid

B - Gaseous

D - Vapour pressure curve for refrigerant R134a

1 - Pressure on the liquid in bar (absolute)

2 - Temperature in °C

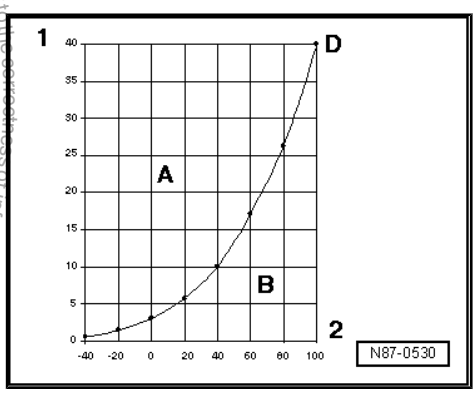

4.3 Vapour pressure table for refrigerant R134a

The vapour pressure table for every refrigerant is published in literature for refrigeration system engineers. This table makes it possible to determine the vapour pressure acting on the column of liquid in a vessel if the temperature of the vessel is known.

Since a characteristic vapour pressure table is known for every refrigerant, one can determine what refrigerant is present by measuring pressure and temperature.

Copyright by Volkswagen AG. Volkswagen AG does not guarantee or accept any liability with respect to the correctness of information in this document. Copyright by Volkswagen AG. Reproduced by copyright. Copying for private or commercial purposes, in part or in whole, is not permitted unless authorised by Volkswagen AG.
satelettronica

Note

Absolute pressure means that 0 bar corresponds to an absolute vacuum. The normal ambient pressure corresponds to 1 bar absolute pressure. On the scales of most pressure gauges, 0 bar corresponds to an absolute pressure of 1 bar (indicated by -1 bar mark below 0).

Temperature in °C	Pressure in bar (positive pressure) R134a
-45	-0.61
-40	-0.49
-35	-0.34
-30	-0.16
-25	0.06
-20	0.32
-15	0.63
-10	1.00
-5	1.43
0	1.92
5	2.49
10	3.13
15	3.90
20	4.70
25	5.63
30	6.70
35	7.83
40	9.10
45	10.54
50	12.11
55	13.83
60	15.72
65	17.79
70	20.05
75	22.52
80	25.21
85	28.14
90	31.34

4.4 Refrigerant R134a

Air conditioners in vehicles use the evaporation and condensation process. Use is made of a substance with a low boiling point, referred to as refrigerant.

The refrigerant employed is tetrafluoroethane or R134a, which boils at -26.5 °C at a pressure of 1 bar.

4.4.1 Physical data of refrigerant R134a

Chemical formula	CH2F–CF3 or CF3–CH2F
Chemical designation	Tetrafluoroethane
Boiling point at 1 bar	-26.5°C

Protected by copyright. Copying for private or commercial purposes, in part or in whole, is not permitted unless authorised by Volkswagen AG. Volkswagen AG does not guarantee or accept any liability with respect to the correctness of information in this document. Copyright by Volkswagen AG.
satelettronica

Solidification point	-101.6°C
Critical temperature	100.6°C
Critical pressure	40.56 bar (technical) pressure equates to 39.5 bar (standard) pressure

4.4.2 Critical point

The critical point (critical temperature and critical pressure) means the point above which there is no longer a surface of separation between liquid and gas.

A substance above its critical point is always in the gaseous state.

At temperatures below the critical point, all types of refrigerant contained within a pressure tank exhibit a liquid phase and a gas phase, so that there is a gas cushion above the liquid.

As long as there is gas in the pressure vessel alongside the liquid, the pressure depends directly on the ambient temperature ⇒ page 7 .

Note

Different types of refrigerant are never to be mixed. Only the refrigerant prescribed for the respective air conditioning system may be used.

4.4.3 Environmental aspects of refrigerant R134a

- R134a is a fluorocarbon and contains no chlorine.
- R134a has a shorter atmospheric persistence than refrigerant R12.
- R134a does not damage the ozone layer, the potential to reduce the amount of ozone is zero.
- The Global Warming Potential (GWP) of R134a amounts to approx. 1430 (the GWP for carbon dioxide amounts to 1).
- R134a contributes only one tenth as much to the greenhouse effect as refrigerant R12.

4.5 Properties of refrigerant R134a

4.5.1 Trade names and designations

Refrigerant R134a is currently available under the following trade names:

- H-FKW 134a
- SUVA 134a
- KLEA 134a

Protected by copyright. Copyright by Volkswagen AG. Volkswagen AG does not guarantee or accept any liability with respect to the correctness of information in this document. Copyright by Volkswagen AG. Reproduction for commercial or private purposes, in part or in whole, is not permitted unless authorised by Volkswagen AG.
satelettronica

Note

- *Different trade names may be used in other countries.*
- *Of the wide range of refrigerants available, this is the only one which may be used for vehicles. The names Frigen and Freon are trade names. They also apply to refrigerants which are not to be used in vehicles.*

4.5.2 Colour

Like water, refrigerants are colourless in both vapour and liquid form. Gas is invisible. Only the boundary layer between gas and liquid is visible (liquid level in indicator tube of charging cylinder or bubbles in sight glass). Liquid refrigerant R134a may have a coloured (milky) appearance in a sight glass. This cloudiness is caused by partially dissolved refrigerant oil and does not indicate a fault.

4.5.3 Vapour pressure

In an enclosed container that is not completely full, refrigerant evaporates as vapour at the surface in a quantity sufficient to form an equilibrium between vapour and liquid. This state of equilibrium occurs under the influence of pressure and is often called vapour pressure. The vapour pressure is temperature-dependant ⇒ page 7 .

4.5.4 Physical properties of R134a

As the vapour pressure curves of R134a and other refrigerants are often very similar, unequivocal identification cannot be made simply on the basis of pressure.

The air conditioner compressor used for R134a is lubricated with special synthetic refrigerant oils, such as PAG oils (polyalkylene glycol oils).

4.5.5 Effects on metal

In its pure state, refrigerant R134a is chemically stable and does not react with iron or aluminium.

However, impurities such as chlorine compounds in the refrigerant do attack certain metals and plastics. This can lead to blockages, leaks and deposits on the air conditioner compressor piston.

4.5.6 Critical temperature and critical pressure

The refrigerant R134a remains stable up to a pressure of 39.5 bar (corresponding to a temperature of 101 °C). Above this temperature, the refrigerant decomposes (see "Combustibility").

4.5.7 Water content

Only very small amounts of water are soluble in liquid refrigerant. On the other hand, refrigerant vapour and water vapour mix in any ratio.

Any water present in the refrigerant circuit will be carried along as droplets. The desiccant, desiccant bag or desiccant cartridge in the receiver or reservoir are capable of holding approx. 7 grams of water before they are full and cannot absorb any more water. If there is further water in the circuit, it will flow to the expansion valve jet or to the restrictor and becomes ice.

The air conditioning system stops cooling.

Protected by copyright. Copying for private or commercial purposes, in part or in whole, is not permitted unless authorised by Volkswagen AG. Volkswagen AG does not guarantee or accept any liability with respect to the correctness of information in this document. Copyright by Volkswagen AG.
satelettronica

Water destroys the air conditioner because at high pressures and temperatures it combines with other impurities to form acids.

4.5.8 Charge factor

There must be space both for liquid and vapour in a container. As the temperature rises, the liquid expands. The vapour-filled space becomes smaller. At a certain point, there will only be liquid in the vessel. Beyond this, even a slight increase in temperature causes great pressure to build up in the vessel as the liquid attempts to continue expanding despite the absence of the necessary space. The resultant force is sufficient to rupture the vessel. To prevent containers from being overcharged, regulations governing the storage of compressed gases specify how many kilograms may be charged into a container for every litre of container volume. This charge factor multiplied by the internal volume gives the permissible charge quantity. The charge factor for refrigerant used in vehicles is 1.15 kg/litre.

4.5.9 Detecting leaks

External damage, for example, can cause a leak in the refrigerant circuit. Because a small leak will involve only small quantities of refrigerant, leaks should be checked for using an electronic leak detector or by introducing a leak detection additive to the refrigerant circuit. Electronic leak detectors can detect leakage rates of less than 5 grams loss of refrigerant per year. The leak detector should be specific to the composition of the particular refrigerant in use. For example, a leak detector for R12 refrigerant is not appropriate for R134a refrigerant because R134a refrigerant has no chlorine atoms to which the lead detector responds.

4.6 Refrigerant oil

Refrigerant oil mixes with the refrigerant (about 20 to 40%, depending on air conditioner compressor type and amount of refrigerant) and circulates constantly in the system, lubricating the moving parts.

Special synthetic refrigerant machine oils such as polyalkylene glycol oil (PAG oil) are used in conjunction with R134a air conditioning systems. This is necessary because ordinary mineral oils are immiscible in R134a. In addition the materials of the R134a air conditioning system could be attacked if the mixture circulated within the refrigerant circuit under pressure and at high temperatures, or the lubricant film in the air conditioner compressor broke down. The use of unapproved oils can lead to the failure of the air conditioning system, so only approved oils must be used.

⇒ Electronic parts catalogue (ETKA)

Type of oil for R134a in cars: PAG

Protected by copyright. Copying for private or commercial purposes, in part or in whole, is not permitted unless authorised by Volkswagen AG. Volkswagen AG does not guarantee or accept any liability with respect to the correctness of information in this document. Copyright by Volkswagen AG.

satelettronica

Note

- *Do not store refrigerant machine oils open to the atmosphere since they are very hygroscopic (they readily absorb water).*
- *Always keep oil container sealed.*
- *Do not re-use old refrigerant oil.*
- *Disposal of used oils: Volkswagen InfoNet; Operation; Handbooks & dealer literature; Handbook Service; 15. Environmental protection; under general instructions follow the link "Environmental protection in the dealership and in the workshop"; 4. Waste disposal; 6. Disposal channels; Disposal of used oils; Refrigerant oils*
- *Used refrigerant oils from systems with halogenated hydrocarbons (at least one hydrogen atom has been replaced by e.g. the halogens fluorine, chlorine, bromine or iodine) must be disposed of as waste requiring particular care. They are not to be mixed with other oils or substances. Proper storage and disposal must be ensured in line with local regulations. Observe, for example in the Federal Republic of Germany, the Climate Protection Regulation Concerning Chemicals (Chemikalien-Klimaschutzverordnung) and the Closed Substance Cycle Waste Management Law (Kreislaufwirtschaftsgesetz, KrWG) (in other countries other statutes and regulations may apply).*
- *Reference sources for technical rules and safety at work/accident prevention for the Federal Republic of Germany.*
- *Sources in other countries may be obtained from the responsible authorities.*
- *Ester-based oils are suitable only for larger systems (not for air conditioning systems in cars).*

4.6.1 Properties of refrigerant oil

The most important properties are high solubility with refrigerant, good lubricating quality, absence of acid and low water content. For this reason, only certain oils may be used. A list of approved refrigerant oils and quantities can be found in the vehicle-specific workshop manuals in ⇒ Rep. gr. 00 or ⇒ Rep. gr. 87 .

The PAG oils suitable for refrigerant R134a are strongly hygroscopic and are immiscible with other oils. Opened containers should therefore be closed again immediately to prevent ingress of moisture. Moisture and acids promote ageing of refrigerant oil, causing it to become dark, viscous and aggressive towards metals.

Note

- *For refrigerant circuits with refrigerant R134a, use only the oil approved for the air conditioner compressor. See ⇒ Rep. gr. 00 or ⇒ Rep. gr. 87 in the repair manual for the specific vehicle.*
- *Disposal of used oils: Volkswagen InfoNet; Operation; Handbooks & dealer literature; Handbook Service; 15. Environmental protection; under general instructions follow the link "Environmental protection in the dealership and in the workshop"; 4. Waste disposal; 6. Disposal channels; Disposal of used oils; Refrigerant oils*

Protected by copyright. Copyright by Volkswagen AG. Copyright by Volkswagen AG. Volkswagen AG does not guarantee or accept any liability with respect to the correctness of information in this document. Copyright by Volkswagen AG. Reproduction authorised only for private or commercial purposes. Reproduction of any part or in whole is prohibited.
satelettronica

4.7 Comfort

A basic requirement for concentration and safe driving is a feeling of comfort in the passenger compartment. This comfort is only reached by using an air conditioning system, particularly when it is hot and humid. Of course, open windows, an open sunroof or increased air ventilation can contribute to comfort, but they all have certain disadvantages within the vehicle interior, such as additional noise, draughts, exhaust gases, unfiltered entry of pollen (unpleasant for allergy sufferers).

A well regulated air conditioning system in conjunction with a well thought-out heating and ventilation system can create a feeling of well-being and comfort by regulating the interior temperature, humidity and rate of air change, regardless of the external conditions. This must be available whether the vehicle is moving or not.

Other important advantages of air conditioning are:

- The cleansing of the air directed into the passenger compartment. (Dust and pollen, for example, are washed out by the moist fins of the evaporator and carried off with the condensation water.)
- Temperatures in a mid-range car (for example, after a short period of driving, ambient temperature 30°C in the shade and the vehicle in direct sunlight).

	With air conditioning	Without air conditioning
Head height	23°C	42°C
Chest	24°C	40°C
Footwell	30°C	35°C

4.7.1 Environmental aspects

As of around 1992, the air conditioning systems of newly manufactured cars have been successively changed to refrigerant R134a. This refrigerant contains no chlorine and therefore does no damage to the ozone layer.

Until about 1992, the air conditioning systems were equipped with refrigerant R12. Due to its chlorine atoms, this CFC has a high potential for destroying ozone and, in addition, a higher potential for increasing the greenhouse effect.

There are programs for exchanging old air conditioning systems containing the ozone-damaging refrigerant R12.

To protect the environment, no refrigerant should be released into the atmosphere ⇒ page 43 (statutory texts and instructions).

4.8 How air conditioning works

The temperature in the passenger compartment depends on the amount of heat radiated through the windows and conducted by the metal parts of the body. In order to maintain comfortable temperatures for the occupants on very warm days, part of the prevailing heat must be pumped away.

Since heat spreads towards cooler bodies, a unit that can create low temperatures is fitted in the vehicle interior Within this, refrigerant is continually evaporated. The heat required to do this is extracted from the air flowing through the evaporator.

The refrigerant carries the heat with it as it is pumped away by the air conditioner compressor. The work performed by the air conditioner compressor on the refrigerant increases its heat content

Protected by copyright. Copying for private or commercial purposes, in part or in whole, is not permitted unless authorised by Volkswagen AG. Volkswagen AG does not guarantee or accept any liability with respect to the correctness of information in this document. Copyright by Volkswagen AG.
satelettronica

and its temperature. Its temperature is now substantially higher than that of the surrounding air.

The hot refrigerant flows with its heat content to the condenser. where the refrigerant dissipates its heat to the surrounding air via the condenser due to the temperature gradient between the refrigerant and the surrounding air.

The refrigerant thus acts as a heat transfer medium. As it is to be re-used, the refrigerant is returned to the evaporator.

For this reason all air conditioning systems are based on the refrigerant circulation principle. There are however differences in the composition of the units.

4.9 General work safety

- In accordance with VBG 20, the Federation of Employers Liability Insurance Associations.
- Observe instructions specific to the workplace; ⇒ Volkswagen ServiceNet; Handbooks; Service handbook; Environmental protection . Refrigerant from air conditioning systems / refrigerant oils - to be displayed at refrigerant designated working area.

4.9.1 Product characteristics

Refrigerants used in car air conditioning systems belong to the new generation of refrigerants, the chlorine-free, partially-fluoridated hydrocarbons (H-CFC, R134a).

With regard to their physical properties, these are refrigerants which have been liquefied under pressure. They are subject to the regulations governing pressure vessels and use is only to be made of approved and appropriately marked containers.

Compliance with specific conditions is required to ensure safe and proper use.

4.9.2 Handling refrigerants

Note

- *Risk of freezing injuries.*
- *The refrigerant can emerge as liquid or as vapour.*
- *Do not open vessels containing refrigerant.*

If refrigerant containers are opened, the contents may escape in liquid or vapour form. The higher the pressure in the container, the more violent the process.

How high the pressure is depends on two factors:

- What type of refrigerant is in the container. “This is because the lower the boiling point, the higher the pressure.”
- The temperature “This is because the higher the temperature, the higher the pressure.”

4.9.3 Wear safety goggles.

Put on safety goggles This will prevent the refrigerant entering the eyes, which in certain circumstances can cause severe injury due to frostbite.

4.9.4 Wear protective gloves and apron

Greases and oils dissolve readily in refrigerants. They would therefore destroy the protective layer of grease if allowed to come

Protected by copyright. Copyright by Volkswagen AG. Distribution and use not authorised without consent by Volkswagen AG. Volkswagen AG does not guarantee or accept any liability with respect to the correctness of information in this document. Copyright by Volkswagen AG. Protected by copyright. Copyright by Volkswagen AG. Distribution and use not authorised without consent by Volkswagen AG. Volkswagen AG does not guarantee or accept any liability with respect to the correctness of information in this document. Copyright by Volkswagen AG. Protected by copyright. Copyright by Volkswagen AG. Distribution and use not authorised without consent by Volkswagen AG. Volkswagen AG does not guarantee or accept any liability with respect to the correctness of information in this document. Copyright by Volkswagen AG.

satelettronica

into contact with the skin. Degreased skin is however sensitive to the cold and germs.

4.9.5 Do not allow liquid refrigerant to come in contact with the skin

The refrigerant draws heat for evaporation from the surrounding area - even if this is the skin. This may give rise to extremely low temperatures. The result is local freezing (boiling point of R134a: -26.5 °C at atmospheric pressure).

4.9.6 Do not breath in refrigerant vapour

Note

In high concentrations, emerging refrigerant vapours can mix with the air and displace the oxygen necessary for breathing.

4.9.7 Absolutely NO SMOKING

A burning cigarette can cause refrigerant to decompose. The resultant substances are toxic and must not be inhaled.

4.9.8 Welding and soldering on refrigeration systems

Before welding and brazing on vehicles (in the vicinity of the air conditioning system components), extract the refrigerant and then purge the system by blowing through with compressed air and using nitrogen.

The products of decomposition of refrigerants under heat are not only poisonous but are strongly corrosive, so that pipework and system parts could be attacked. This refers primarily to hydrogen fluoride.

4.9.9 Pungent smell

A pungent odour indicates that the products of decomposition mentioned above are already present. Breathing in these substances must be avoided in all circumstances, or the bronchial tubes, lungs and other organs could be injured.

4.9.10 First aid

- Following contact with eyes or mucous membranes, immediately rinse with copious amounts of running water and consult an eye specialist.
- Following contact with the skin, immediately remove clothing affected and rinse skin with copious amounts of water.
- Following inhalation of highly concentrated refrigerant vapours, person concerned is to be taken immediately into the open air. Call a doctor. Administer oxygen in the event of breathing difficulties. If the person affected is having great difficulty breathing or is not breathing at all, tilt back head and administer artificial respiration.

4.9.11 Handling pressure vessels

- Secure containers to prevent them falling over.

Secure upright cylinders to stop them falling over and cylinders lying flat to stop them rolling away.

- Containers must never be thrown.

Protected by copyright. Copyright by Volkswagen AG. Volkswagen AG does not guarantee or accept any liability with respect to the correctness of information in this document. Copyright by Volkswagen AG. Protected by copyright. Reproduction, in whole, is not permitted unless authorised by Volkswagen AG. Volkswagen AG does not guarantee or accept any liability with respect to the correctness of information in this document. Copyright by Volkswagen AG.

satelettronica

If they should fall, the containers may become severely deformed and break open. The refrigerant evaporates immediately, liberating considerable force. Flying fragments of cylinders can cause severe injuries.

Valves may break off if cylinders are not properly transported. To protect cylinder valves, cylinders are only to be transported with a protective cap screwed on.

- Do not place near radiators!

High temperatures can occur near radiators. High temperatures are also associated with high pressures and the maximum permissible tank pressure may be exceeded.

4.9.12 Do not heat up above 50°C

To prevent danger, the pressure vessel regulations provide that vessels shall not be heated to more than 50°C.

4.9.13 Do not expose to uncontrolled heat

Do not heat with a naked flame under any circumstances. The local overheating that will result can change the structure of the container's materials, thereby reducing the safe maximum pressure limit of the container. There is also a danger of the refrigerant decomposing due to localised overheating.

4.9.14 Seal empty tanks/containers

Empty refrigerant tanks/containers must always be closed to prevent the ingress of moisture. Moisture causes steel tanks/containers to rust. Rust weakens the tank/container walls. In addition, rust particles which ingress into refrigeration systems from containers cause malfunctions.

4.9.15 Safety instructions for using extraction and charging equipment

- Before connecting the charging system to the air conditioner, make sure that all existing shut-off valves are closed.
- Before the charging equipment is decoupled from the air conditioning system, ensure that the process has finished. The reason for this is to ensure that no refrigerant oil escapes into the atmosphere.
- Once the purified refrigerant from the charging system has been filled into an external compressed-gas cylinder, close the hand shut-off valves at the cylinder and charging system.
- Do not expose charging system to moisture or use it in a wet environment.
- Before performing service work on the charging system, disconnect the power supply.
- To reduce the risk of fire, avoid using an extension cable. If the use of an extension cable is unavoidable, use an extension cable with a cross-section of at least 2.5 mm^2.
- In case of fire, remove external cylinder.
- If entrained oil from the air conditioning system suction accumulator is trapped in the measuring beaker supplied, be sure subsequently to pour the oil into a container that can be sealed, since the oil contains a small amount of refrigerant. Refrigerant must not be released into the environment.
- When the air conditioner service station is switched off, it must be secured against rolling away.

Protected by copyright. Copying for private or commercial purposes, in part or in whole, is not permitted unless authorised by Volkswagen AG. Volkswagen AG does not guarantee or accept any liability with respect to the correctness of information in this document. Copyright by Volkswagen AG.
satelettronica

4.10 Safety measures when working on vehicles with air conditioning and when working with refrigerant R134a

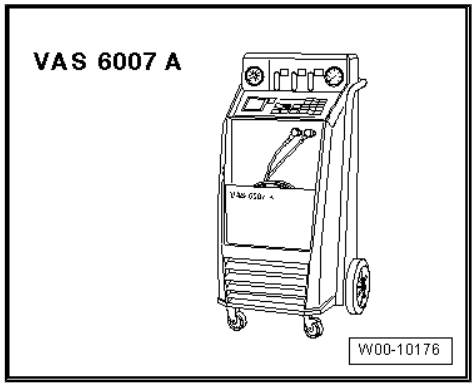

Air conditioner service station

⇒ Workshop equipment

Protected by copyright. Copying for private or commercial purposes, in part or in whole, is not permitted unless authorised by Volkswagen AG. Volkswagen AG does not guarantee or accept any liability with respect to the correctness of information in this document. Copyright by Volkswagen AG.

Risk of freezing injury from refrigerant

When working on the air conditioning system, there is a risk of highly pressurised refrigerant escaping from the system. There is a risk of injury to the skin and parts of the body due to freezing.

– Wear protective gloves.

– Wear safety goggles.

– Extract refrigerant and open the refrigerant circuit immediately afterwards.

– If more than 10 minutes have passed since the refrigerant was extracted, repeat the extraction process before opening the refrigerant circuit. Pressure could build up in the refrigerant circuit from continued evaporation.

Risk of damage to refrigerant lines

There is a risk of damage to the refrigerant lines due to rupture of the inner foil.

– Never bend refrigerant lines to a radius less than 100 mm.

• Do not weld, braze or soft-solder any parts of the charged air conditioning system. This also applies to welding and soldering work on the vehicle when the danger exists that parts of the air conditioning system may heat up. When spray painting is carried out, temperatures of objects in the drying booth or the preheating zone must not exceed 80°C.

Reason

Heating causes great excess pressure to develop in the system, which can cause the pressure release valve of the system to open.

Remedy

– Drain the refrigerant circuit using the air conditioner service station .

Note

Damaged or leaking components of the air conditioning system must not be repaired by welding or soldering. They must always be renewed.

satelettronica

Refrigerant containers (e.g. charging cylinders of air conditioner service station) must never be subjected to excessive heat or exposed to direct sunlight.

Remedy:

– Containers must never be completely filled with liquid refrigerant. Without sufficient expansion space (gas cushion), the container will burst should the temperature rise with devastating consequences ⇒ page 9 .

Under no circumstances may refrigerant be charged into systems or vessels containing air.

Remedy:

– Evacuate systems and containers before charging with refrigerant.

4.11 Basics for working on refrigerant circuit

- Observe instructions specific to the workplace; ⇒ Volkswagen ServiceNet; Handbooks; Service handbook; Environmental protection . Refrigerant from air conditioning systems / refrigerant oils - to be displayed at refrigerant designated working area.
- Observe the utmost cleanliness when working.
- When handling refrigerants and nitrogen, wear protective clothing, protective glasses and protective gloves.
- Switch on exhaust gas fume extractor (if there is one).
- Drain the refrigerant circuit using only the air conditioner service station , and only then undo the screwed joints and renew the defective components.
- Protect units and hoses against moisture and dirt using sealing caps.
- Make exclusive use of tools and materials intended for refrigerant R134a.
- Protect refrigerant oil by sealing container to prevent ingress of moisture.

– Blow through refrigerant circuit with compressed air and nitrogen ⇒ page 68 .

– Flush refrigerant circuit with refrigerant R134a ⇒ page 70 .

In vehicles that have an air conditioner compressor without a magnetic clutch:

Protected by copyright. Copying for private or commercial purposes, in part or in whole is not permitted unless authorised by Volkswagen AG. Volkswagen AG does not guarantee or accept any liability with respect to the correctness of information in this document. Copyright by Volkswagen AG.
satelettronica

Note

- *The engine may be started only when the refrigerant circuit is properly assembled. If, for example, the refrigerant lines are not connected to the air conditioner compressor and the engine is running, the compressor may heat up so much through internal warming that it will be destroyed.*
- *The air conditioner compressor regulating valve - N280- is not activated when the refrigerant circuit is empty and the air conditioner compressor idles with the engine.*
- *If it is necessary to start engine with an empty refrigerant circuit:*
- *The refrigerant circuit must be fully assembled.*
- *At least ¼ of the quantity of refrigerant oil specified for this refrigerant circuit must be in the air conditioner compressor.*
- *The engine speed must not exceed 2000 rpm.*
- *The engine should run for less than 10 minutes.*

4.11.1 O-ring

- Use only O-rings that are resistant to refrigerant R134a and related refrigerant oils. O-rings are no longer colour-coded. Coloured and black O-rings are used.
- Check that the O-rings used have the correct internal diameters.

⇒ Rep. gr. 87

⇒ Electronic parts catalogue (ETKA)

- Never reuse O-rings.
- Before installing, moisten O-rings lightly with refrigerant oil (PAG oil).

Note

- *When purging components with compressed air and nitrogen, always collect the gas mixture exiting the component with suitable exhaust gas extraction equipment (workshop fume extractor).*
- *After completion of repair work screw sealing caps (with seals) onto valve and service connections.*

Before operating the air conditioning system. Check the vehicle-specific charge quantities ⇒ Rep. gr. 87 .

Do not top up refrigerant in circuit; discharge existing refrigerant and re-charge system.

4.11.2 Before operating the air conditioning system after recharging with refrigerant

– After installing a new air conditioner compressor or filling with fresh refrigerant oil (e.g. after blowing out refrigerant circuit), turn compressor pulley 10 revolutions by hand before starting engine. This will prevent damage to the air conditioner compressor.

– On 5 or 10-cylinder diesel engine, turn air conditioner compressor at overload protection 10 times by hand. Then install

Copyright by Volkswagen AG. Volkswagen AG does not guarantee or accept any liability with respect to the correctness of information in this document. Copying for private or commercial purposes, in part or in whole, is not permitted unless authorised by Volkswagen AG.
satelettronica

compressor. This will prevent damage to the air conditioner compressor.

– Start the engine with the air conditioning system switched off (the air conditioning system magnetic clutch - N25- and the air conditioner compressor regulating valve - N280- are not activated).

– After the engine has stabilised at its idling speed, switch on the air conditioner compressor and allow the engine to idle for at least 10 minutes at maximum cooling power.

Protected by copyright. Copying for private or commercial purposes, in part or in whole, is not permitted unless authorised by Volkswagen AG. Volkswagen AG does not guarantee or accept any liability with respect to the correctness of information in this document. Copyright by Volkswagen AG.

satelettronica

5 General information on refrigerant circuit

5.1 Components of refrigerant circuit

- All components of the refrigerant circuit that were submitted for quality monitoring must always be sealed (use the original sealing caps from the genuine part).
- Renew damaged or leaky components of the refrigerant circuit ⇒ page 191 .
- The genuine parts (air conditioner compressor, reservoir, receiver, evaporator and condenser) are charged with nitrogen before shipment. This charge is being gradually discontinued. Therefore, when the sealing plugs are unscrewed from the genuine part little or no pressure equalisation is noticeable.

5.1.1 Distribution of the refrigerant circuit components and their influence on the high-pressure and low-pressure sides

On the high-pressure side, there are the condenser, the receiver and the restrictor or expansion valve that acts as the separation between the high-pressure fluid and low-pressure fluid sides.

High pressure is created because the restrictor or expansion valve forms a restriction and holds back the refrigerant, leading to increased pressure and temperature.

Excessive pressure results if the circuit is filled with too much refrigerant or refrigerant oil, or the condenser is dirty, the radiator fan is defective, there is a blockage in the system or there is moisture in the refrigerant circuit (causing the restrictor or expansion valve to ice up).

On the low-pressure side, there are the evaporator, the reservoir, the temperature sensor for the evaporator and the air conditioner compressor that acts as the separation between the high-pressure and low-pressure gas sides.

A loss of pressure in the system can be due to loss of refrigerant, restrictor or expansion valve failure (not creating a restriction), defective air conditioner compressor or an iced-up evaporator.

Protected by copyright. Copying for private or commercial purposes, in part or in whole, is not permitted unless authorised by Volkswagen AG. Volkswagen AG does not guarantee or accept any liability with respect to the correctness of information in this document. Copyright by Volkswagen AG.
satelettronica

5.1.2 Air conditioning system compressor with magnetic clutch:

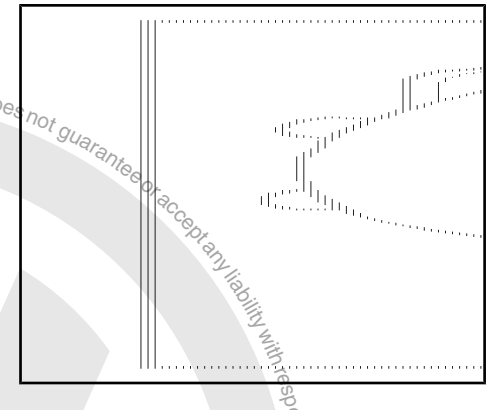

The air conditioner compressor is driven by a V-belt from the engine.

An electromagnetic clutch is fitted to the air conditioner compressor. When the air conditioning system is switched on, it transmits the mechanical drive between the V-belt pulley and the air conditioner compressor drive shaft.

A fusible link is incorporated in the air conditioner compressor V-belt pulley. In the event of stiffness in the air conditioner compressor, it trips the electromagnetic clutch and protects the V-belt drive from overload.

The air conditioner compressor draws refrigerant gas from the evaporator, compresses it and sends it to the condenser.

Note

- *The air conditioner compressor contains refrigerant oil, which can be mixed with R134a refrigerant at any temperature.*
- *The identification plate states the refrigerant for which the air conditioner compressor is suitable. A valve regulates the pressure on the low-pressure side within the specified range (control characteristic).*
- *So that the air conditioner compressor suffers no damage when the refrigerant circuit is empty, the magnetic clutch is disconnected and the regulating valve for the air conditioner compressor - N280- is no longer activated (the air conditioner compressor idles with the engine).*

Protected by copyright. Copyright by Volkswagen AG.
Volkswagen AG does not guarantee or accept any liability with respect to the correctness of information in this document. Copyright by Volkswagen AG.
Copyright by Volkswagen AG. Volkswagen AG does not permit third parties authorised to use this document to make it available to other third parties in whole or in part or in whole or in part.
satelettronica

Volkswagen AG. Volkswagen AG does not guarantee or accept any liability with respect to the correctness of information in this document. Copyright by Volkswagen AG. Unauthorised copying for private or commercial purposes, in part or in whole, is not permitted unless authorised by Volkswagen AG.

5.1.3 Air conditioner compressor without magnetic clutch

The air conditioner compressor is driven by a V-belt from the engine.

A shear link is incorporated in the air conditioner compressor V-belt pulley. In the event of stiffness in the air conditioner compressor, it shears off and protects the V-belt drive from overload.

The air conditioner compressor draws refrigerant gas from the evaporator, compresses it and sends it to the condenser.

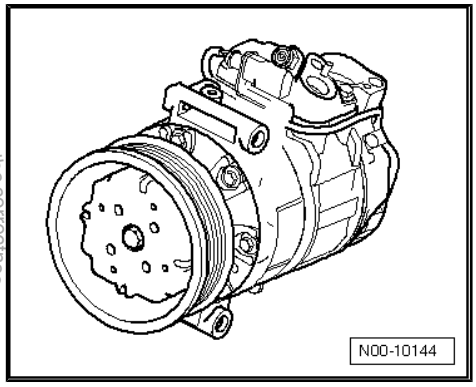

Note

- *The air conditioner compressor contains refrigerant oil, which is miscible with R134a refrigerant at all temperatures.*
- *The identification plate states the refrigerant for which the air conditioner compressor is suitable. A valve regulates the pressure on the low-pressure side within the specified range (control characteristic).*
- *The regulating valve for this air conditioner compressor is externally activated.*
- *The engine should be started only when the refrigerant circuit has been fully assembled* *⇒ page 18*.
- *The air conditioner compressor has an internal oil circuit to ensure that the air conditioner compressor is not damaged when the refrigerant circuit is empty. This means that approx. 40 to 50 cm^3 of refrigerant oil remain in the air conditioner compressor.*

satelettronica

5.1.4 Air conditioner compressor without magnetic clutch, with elastic drive coupling

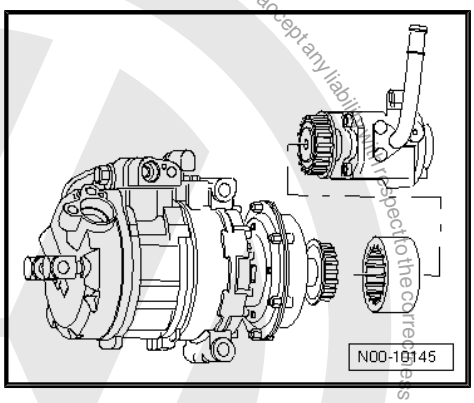

The air conditioner compressor is driven directly by the power steering vane pump.

There is an overload protection on the drive shaft of the air conditioner compressor, which shears in the event of the air conditioner compressor seizing, thus permitting the power steering vane pump to remain operational.

The air conditioner compressor draws refrigerant gas from the evaporator, compresses it and sends it to the condenser.

Note

- *The air conditioner compressor contains refrigerant oil, which is miscible with R134a refrigerant at all temperatures.*
- *The identification plate states the refrigerant for which the air conditioner compressor is suitable. A valve regulates the pressure on the low-pressure side within the specified range (control characteristic).*
- *The regulating valve for this air conditioner compressor is externally activated.*
- *The engine should be started only when the refrigerant circuit has been fully assembled* *⇒ page 18* *.*
- *The air conditioner compressor has an internal oil circuit to ensure that the air conditioner compressor is not damaged when the refrigerant circuit is empty. This means that approx. 40 to 50 cm^3 of refrigerant oil remain in the air conditioner compressor.*

5.1.5 Electrical air conditioner compressor for high-voltage system

DANGER

Danger to life from high voltage.

Severe or fatal injury from electric shock.

– **The high-voltage system must be de-energised by a suitably qualified technician.**

Volkswagen AG. Volkswagen AG does not guarantee or accept any liability with respect to the correctness of information in this document. Copyright by Volkswagen AG.
Copyright by Volkswagen AG. Copying for private or commercial purposes, in part or in whole, is not permitted unless authorised by Volkswagen AG.
satelettronica

Note

- *The electrical air conditioner compressor requires a different refrigerant oil!*
- *For capacities, see workshop manual for specific vehicle.*
- *Do not touch air conditioner compressor when drive units are starting. Danger of short circuit!*

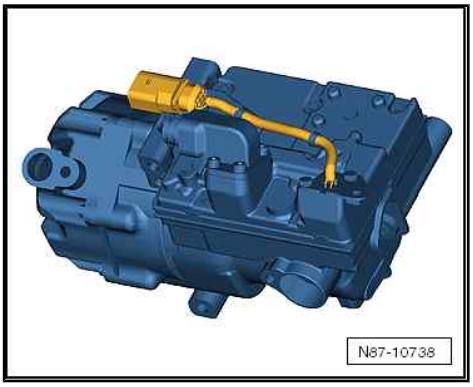

Electrical air conditioner compressor

The air conditioner compressor draws refrigerant gas from the evaporator, compresses it and sends it to the condenser.

Note

- *The air conditioner compressor contains refrigerant oil, which is miscible with R134a refrigerant at all temperatures.*
- *The identification plate states the refrigerant for which the air conditioner compressor is suitable. The flow rate is controlled via the engine speed.*
- *The engine should be started only when the refrigerant circuit has been fully assembled* *⇒ page 18* *.*
- *The air conditioner compressor has an internal oil circuit to ensure that the air conditioner compressor is not damaged when the refrigerant circuit is empty. This means that approx. 40 to 50 cm^3 of refrigerant oil remain in the air conditioner compressor.*
- *The air conditioner has a pressure relief valve.*

5.1.6 Condenser

The condenser transfers heat from the compressed refrigerant gas to the surrounding air.

When this happens, the refrigerant gas condenses to liquid.

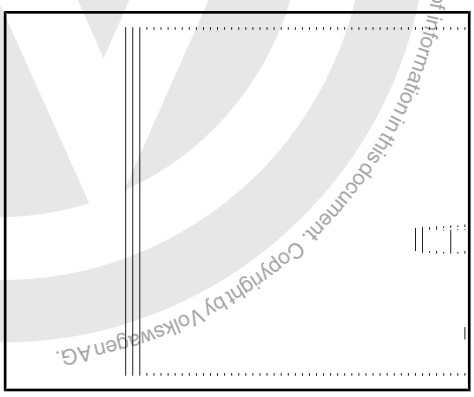

Protected by copyright. Copying for private or commercial purposes, in part or in whole, is not permitted unless authorised by Volkswagen AG. Volkswagen AG does not guarantee or accept any liability with respect to the correctness of information in this document. Copyright by Volkswagen AG.
satelettronica

5.1.7 Evaporator

The liquid refrigerant evaporates in the tubes of the evaporator. The required heat is extracted from the air flowing past the evaporator ribs. The air cools down. The refrigerant evaporates and is drawn into the air conditioning system compressor carrying with it the heat it has absorbed.

A restrictor or an expansion valve supplies a defined quantity of refrigerant to the evaporator. In systems with an expansion valve the flow rate is regulated such that only gaseous refrigerant emerges at the evaporator outlet.

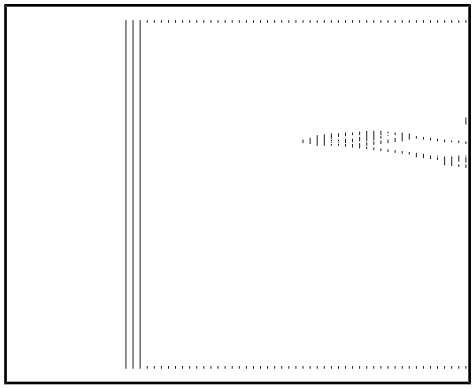

5.1.8 Reservoir

The reservoir collects the vaporised and gaseous mixture coming from the evaporator to ensure the air conditioner compressor receives only gaseous refrigerant. The vapour becomes gaseous refrigerant.

Refrigerant oil flowing in the circuit does not remain in the reservoir because an oil extraction hole has been provided.

Any moisture which has entered the refrigerant circuit during assembly will be trapped by a filter (drying bag) in the reservoir.

Gaseous refrigerant with oil is drawn in by the air conditioner compressor.

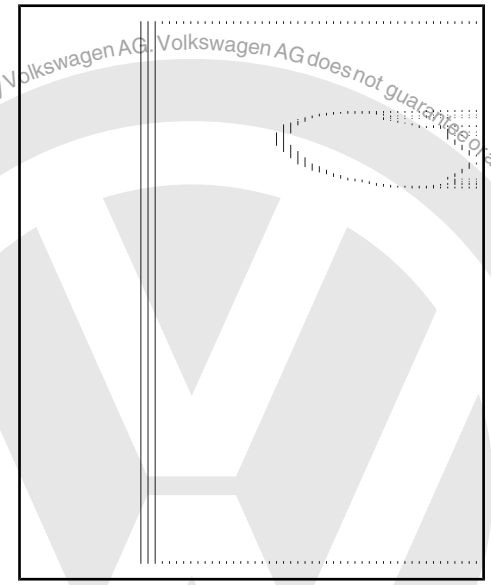

Note

- *Renew the reservoir if the refrigerant circuit has stood open for any length of time (more than the normal repair time) and moisture has entered the system, or if it is required because of a specific complaint* ⇒ page 191 *.*
- *Do not remove sealing plugs -A- and -B- until just before installation.*
- *The desiccant bag in an unsealed reservoir will become saturated with moisture within a short time and is then unusable.*
- *When installing, observe arrow indicating direction of flow if applicable.*

Protected by copyright. Copying for private or commercial purposes, in part or in whole, is not permitted unless authorised by Volkswagen AG. Volkswagen AG does not guarantee or accept any liability with respect to the correctness of information in this document. Copyright by Volkswagen AG.
satelitronica

5.1.9 Restrictor

The restrictor creates a constriction. This restriction limits the flow, separating the high pressure and low pressure sides in the refrigerant circuit. Upstream of the restrictor, the refrigerant is warm due to the high pressure. Downstream of the restrictor, the refrigerant is cold due to the low pressure. Upstream of the constriction is a strainer to catch dirt and downstream of the constriction is a strainer to atomise the refrigerant before it enters the evaporator.

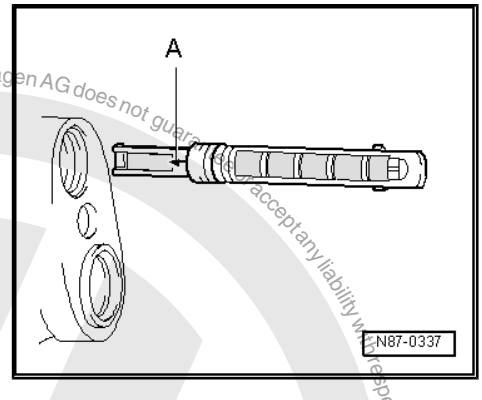

Note

- *Arrow -A- on the restrictor points to the evaporator.*
- *Renew it every time the refrigerant circuit is opened.*
- *Observe different versions.*

⇒ Rep. gr. 87

⇒ Electronic parts catalogue (ETKA)

5.1.10 Receiver

The receiver collects the liquid droplets and directs them in a continuous stream to the expansion valve. Moisture which has entered the refrigerant circuit during assembly is collected by the desiccant bag in the receiver.

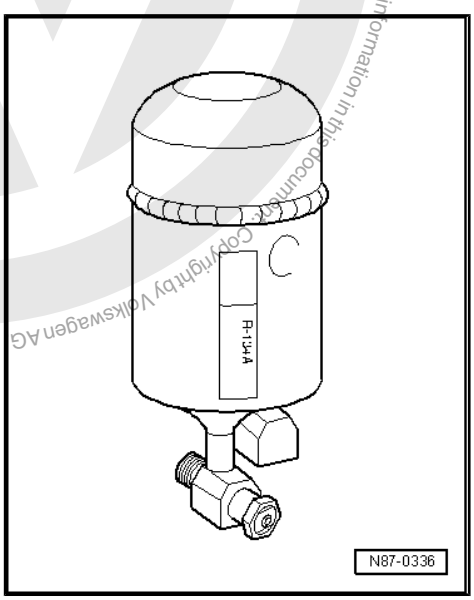

Note

- *Renew the reservoir if the refrigerant circuit has stood open for any length of time (more than the normal repair time) and moisture has entered the system, or if it is required because of a specific complaint* *⇒ page 191* *.*
- *Do not remove sealing plugs until just before installation.*
- *The desiccant bag in an unsealed receiver will become saturated with moisture within a short time and is then unusable.*
- *When installing, observe arrow indicating direction of flow if applicable.*

The new generation of receivers is mounted directly on the condenser and contains a desiccant cartridge.

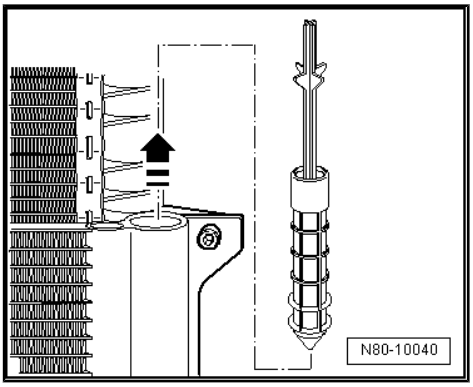

Note

- *Renew the desiccant cartridge if the refrigerant circuit was open for a longer period of time (more than the normal repair time) and moisture has entered the system, or if it is required because of a specific complaint* *⇒ page 191* *.*
- *Remove the dryer cartridge from its packaging only immediately before installing it.*
- *A dryer cartridge in unsealed packaging will become saturated with moisture within a short time and is then unusable.*

Protected by copyright. Copying for private or commercial purposes, in part or in whole, is not permitted unless authorised by Volkswagen AG. Volkswagen AG does not guarantee or accept any liability with respect to the correctness of information in this document. Copyright by Volkswagen AG
satelettronica

5.1.11 Expansion valve

The expansion valve atomises incoming refrigerant and regulates the flow so that, depending on the heat transport, the vapour does not become a gas until it reaches the outlet of the evaporator.

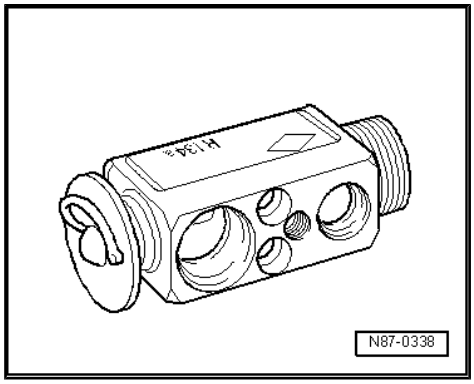

5.1.12 O-ring

These O-rings seal the joints between the individual components of the refrigerant circuit.

Use only seals that are resistant to refrigerant R134a and its associated refrigerant oils. This is assured by using genuine replacement parts.

⇒ Electronic parts catalogue (ETKA)

O-ring

- Strictly use only once:
- Check that diameters -a- and -b- are correct.
- Moisten with refrigerant oil before fitting

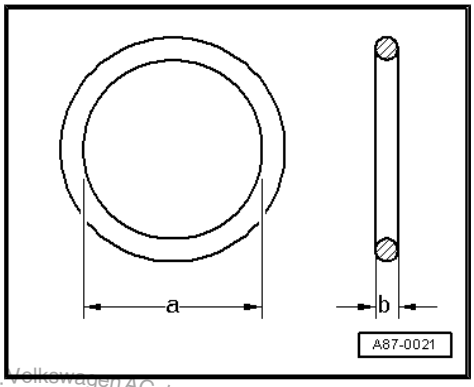

5.1.13 Pipes and hoses of refrigerant circuit

The mixture of refrigerant oil and refrigerant R134a attacks certain metals (e.g. copper) and alloys and dissolves certain hose materials. Therefore, always use genuine spare parts.

The pipes and hoses are joined with bolted connections or special connectors.

Note

Observe specified torques for bolted connections and use the envisaged release tools for connectors.

5.1.14 High-pressure safety valve

The high pressure safety valve is fitted to the air conditioner compressor or the receiver.

The valve opens at a pressure above approx. 38 bar and closes again when the pressure has dropped (approx. 30 bar).

Not all the refrigerant is lost from the system.

Depending on the version, a transparent plastic disc may be fitted, which breaks when the valve opens.

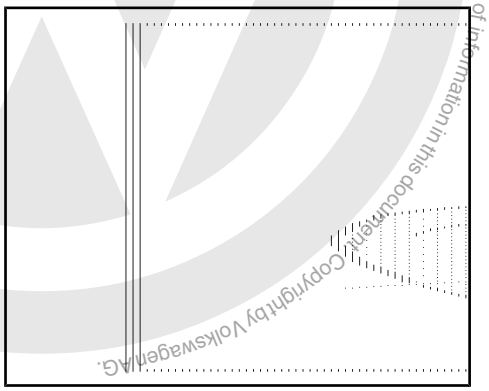

Protected by copyright. Copying for private or commercial purposes, in part or in whole, is not permitted unless authorised by Volkswagen AG. Volkswagen AG does not guarantee or accept any liability with respect to the correctness of information in this document. Copyright by Volkswagen AG.
satelettronica

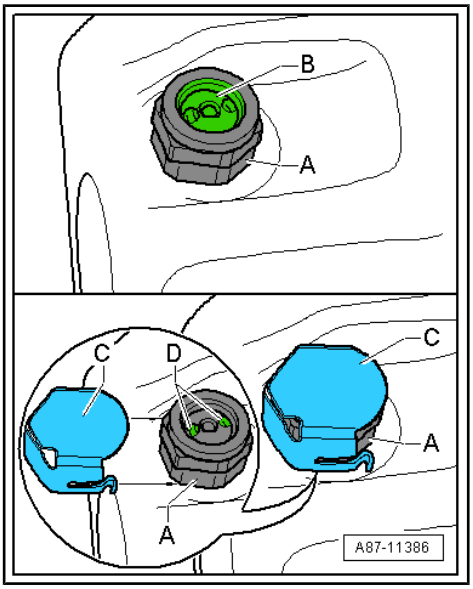

Note

- *Depending on the version, a transparent plastic washer -B- may be attached to the high pressure safety valve -A- which breaks off as soon as the valve is actuated.*
- *Depending on the version of high pressure safety valve -A-, a cover -C- may also be pushed onto the high pressure safety valve -A-. Should the pressure in the refrigerant circuit actually rise above the opening pressure of the high pressure safety valve -A- and cause the valve to open, refrigerant will not escape in one direction but scatter through the openings -D- beneath the cover -C- instead.*
- *If a high-pressure safety valve -A- needs to be renewed, the specified torque for the new valve (depending on the manufacturer and the version of the air conditioner compressor) must be observed when installing. Air conditioner compressors manufactured by "Denso", "Sanden" and "Valeo" are equipped with an O-ring seal (currently valid torque settings are: 10 Nm for "Denso" and "Zexel/Valeo" air conditioner compressors, and 15 Nm for "Sanden" air conditioner compressors). Air conditioner compressors manufactured by "Delphi" are fitted with an oil seal (currently valid torque setting: 15 Nm).*
- *Renewing seals (oil seals or O-rings) ⇒ Electronic parts catalogue .*
- *If a seal (oil seal or O-ring) fitted to the high-pressure safety valve is not available as a replacement part, the removed old part can be reused (as an exception to the general rule of using new seals only). The old seal, however, must always be checked for damage prior to installation. If any damage or deformation is detected on the old seal, it must be renewed with a commercially available new part ⇒ Electronic parts catalogue .*
- *After filling the refrigerant circuit, check the installed high-pressure safety valve for leaks using e.g. an electronic leak detector.*

5.2 Design of refrigerant circuit

5.2.1 Refrigerant circuit with expansion valve and evaporator

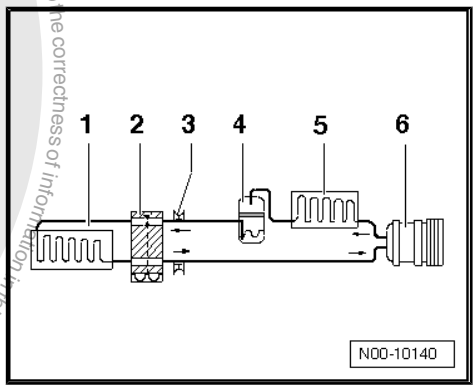

1 - Evaporator
2 - Expansion valve
3 - Valve for extracting, charging and measuring
4 - Receiver with desiccant bag or cartridge
5 - Condenser
6 - Air conditioner compressor

Note

Arrows show direction of refrigerant flow

satelettronica

5.2.2 Refrigerant circuit with restrictor and reservoir

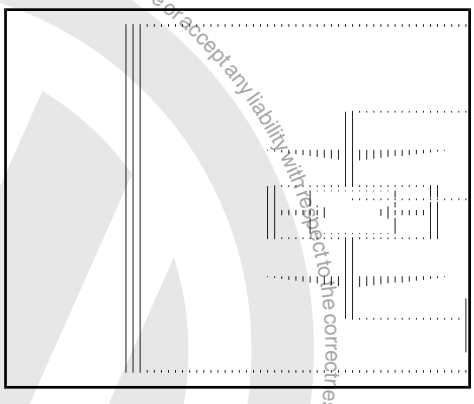

1 - Air conditioner compressor

2 - Condenser

3 - Restrictor

4 - Evaporator

5 - Reservoir with desiccant cartridge

Note

Arrows show direction of refrigerant flow

5.3 Evacuation and charging valves for quick-release couplings of air conditioner service station on refrigerant circuit

Special tools and workshop equipment required

- Torque wrench - V.A.G 1783- (2…10 Nm) with 1/4" ratchet adapter - VAS 6234-

CAUTION

Risk of freezing injury caused by escaping pressurised refrigerant.

There is a risk of injury to the skin and parts of the body due to freezing.

- **Wear protective gloves.**
- **Wear safety goggles.**
- **Extract refrigerant and open the refrigerant circuit immediately afterwards.**
- **If more than 10 minutes have passed since the refrigerant was extracted, repeat the extraction process before opening the refrigerant circuit. Pressure could build up in the refrigerant circuit from continued evaporation.**

- Only valves and connections resistant to R134a refrigerant and the related refrigerant oils may be used.
- Different connections (external diameter) for high-pressure and low-pressure sides.
- Always screw on sealing caps.

Arrangement within the vehicle.

See vehicle-specific repair manual ⇒ Rep. gr. 87

Copyright by Volkswagen AG. Volkswagen AG does not guarantee or accept any liability with respect to the correctness of information in this document. Copyright by Volkswagen AG. Reproduced by copyright. Copy, photocopy, reproduction, commercial purposes, in part or in whole, is not permitted unless authorised by Volkswagen AG.

satelettronica

5.3.1 Evacuation and charging valve with Schrader valve

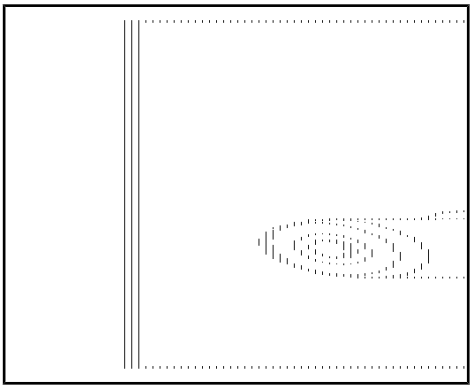

Note

- *Torque wrench - V.A.G 1783- with 1/4" ratchet adapter - VAS 6234-*
- *Appropriate insert - T10364- to remove Schrader valve core* ⇒ page 205

A - Service port (soldered in)

B - Valve core (2.4 ± 0.2 Nm)

C - O-ring (for the valve)

D - Sealing cap with seal

5.3.2 Extraction and charging valve, high-pressure side

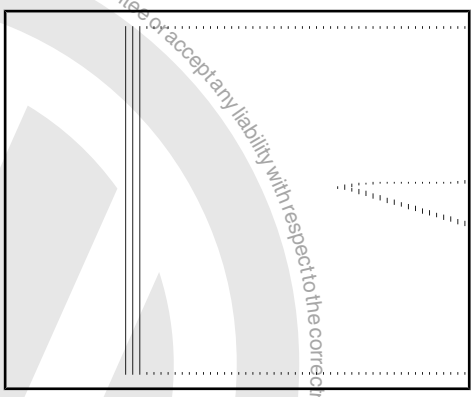

Note

- *Torque wrench - V.A.G 1783- with 1/4" ratchet adapter - VAS 6234-*
- *Appropriate insert - T10364- to remove valve core* ⇒ page 205

1 - Base with external or internal thread

2 - Seal designation: black or colour-coded

3 - Valve with external thread and groove for seal (7 Nm)

4 - Seal designation: black or colour-coded

5 - Cap

5.3.3 Extraction and charging valve, low-pressure side

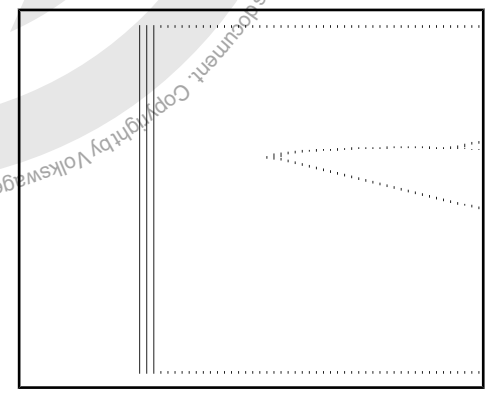

Note

- *Torque wrench - V.A.G 1783- with 1/4" ratchet adapter - VAS 6234-*
- *Appropriate insert - T10364- to remove valve core* ⇒ page 205

1 - Connection with external thread and groove for O-ring

2 - Seal designation: black or colour-coded

3 - Valve with external thread and groove for seal (7 Nm)

4 - Seal designation: black or colour-coded

5 - Cap

Protected by copyright. Copying for private or commercial purposes, in part or in whole, is not permitted unless authorised by Volkswagen AG. Volkswagen AG does not guarantee or accept any liability with respect to the correctness of information in this document. Copyright by Volkswagen AG.
satelettronica

5.4 Switches and senders in refrigerant circuit and related connections

Note

See vehicle-specific refrigerant circuit for switching pressures, removing and fitting switches, together with switch arrangement and versions.

⇒ Rep. gr. 87

5.4.1 High-pressure switch for air conditioning system - F23-

Function:

Switches radiator fan to next higher speed when pressure increases in refrigerant circuit (approx. 16 bar).

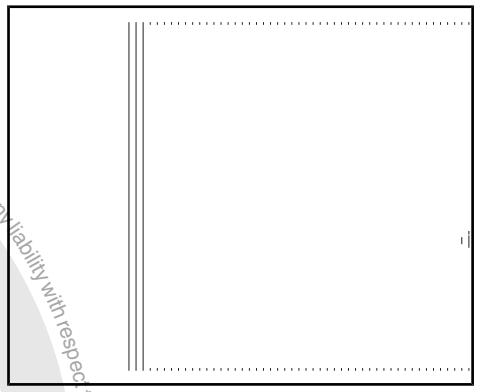

5.4.2 High-pressure switch for magnetic clutch - F118-

Function:

In the event of excess pressure in the refrigerant circuit, switches the air conditioner compressor off (at approx. 32 bar).

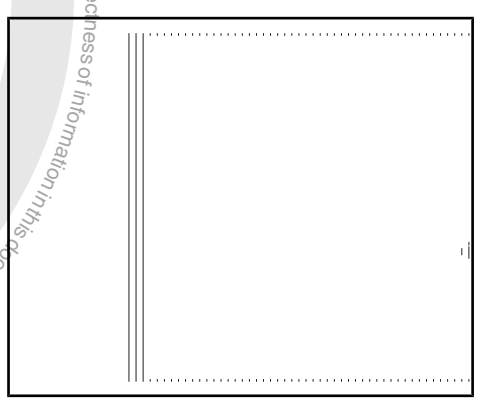

5.4.3 Low-pressure switch for air conditioning system - F73-

Function:

In the event of pressure loss in the refrigerant circuit, switches the air conditioner compressor off (at approx. 2 bar).

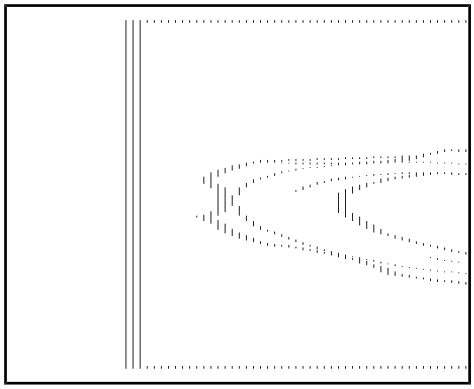

Protected by copyright. Copying for private or commercial purposes, in part or in whole, is not permitted unless authorised by Volkswagen AG. Volkswagen AG does not guarantee or accept any liability with respect to the correctness of information in this document. Copyright by Volkswagen AG.

satelettronica

5.4.4 Connections with valve for switches in refrigerant circuit

CAUTION

Risk of freezing injury caused by escaping pressurised refrigerant.

There is a risk of injury to the skin and parts of the body due to freezing.

- **Wear protective gloves.**
- **Wear safety goggles.**
- **Extract refrigerant and open the refrigerant circuit immediately afterwards.**
- **If more than 10 minutes have passed since the refrigerant was extracted, repeat the extraction process before opening the refrigerant circuit. Pressure could build up in the refrigerant circuit from continued evaporation.**

- The switches on the high pressure and low pressure sides have different threads.
- Only valves and O-rings resistant to R134a refrigerant and the related refrigerant oils may be used.

A - Connection (brazed)

B - O-ring

C - Valve (with O-ring)

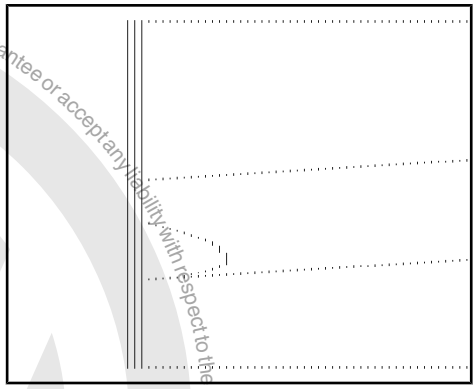

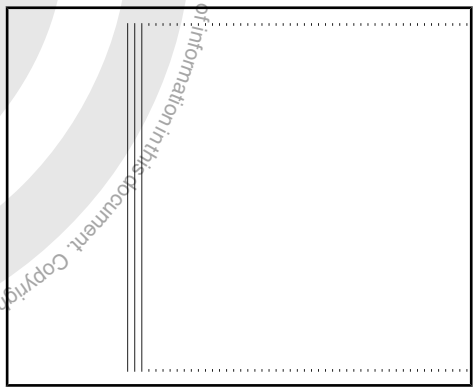

5.4.5 Air conditioning system pressure switch - F129-

This pressure switch has 3 functions:

1. Switches radiator fan to next higher speed when pressure increases in refrigerant circuit (approx. 16 bar).

2. Switches the air conditioning system off in the event of excess pressure (approx. 32 bar) (e.g. because of lack of engine cooling).

3. Switches the air conditioning system off in the event of insufficient pressure (approx. 2 bar) (e.g. because of loss of refrigerant).

Note

The air conditioning system pressure switch - F129- replaces the high-pressure switch for air conditioning system - F23- , the low-pressure switch for air conditioning system - F73- and the high-pressure switch for magnetic clutch - F118- .

Protected by copyright. Copyright by Volkswagen AG. Copyright by Volkswagen AG. Volkswagen AG does not guarantee or accept any liability with respect to the correctness of information in this document. Copying for private or commercial purposes, in part or in whole, is not permitted unless authorised by Volkswagen AG.
satelettronica

5.4.6 High-pressure sender - G65-

This high-pressure sender - G65- is fitted in place of the air conditioning system pressure switch - F129- .

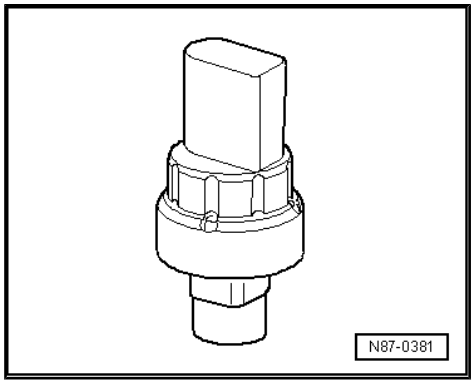

When voltage is applied to the high-pressure sender, it generates a square wave signal, or data telegram. This signal changes with the pressure in the system.

Using this signal, the control units that are connected in-line (radiator fan control unit, engine control unit, operating and display unit for Climatronic air conditioning system - E87- or Climatronic control unit - J255- etc.) calculate the pressure in the refrigerant circuit and actuate the radiator fan, the engine, the air conditioning system magnetic coupling - N25- accordingly and/or alter actuation from the air conditioning system compressor regulating valve - N280- .

5.4.7 Refrigerant pressure and temperature sender - G395-

CAUTION

Risk of freezing injury caused by escaping pressurised refrigerant.

There is a risk of injury to the skin and parts of the body due to freezing.

- **Wear protective gloves.**
- **Wear safety goggles.**
- **Extract refrigerant and open the refrigerant circuit immediately afterwards.**
- **If more than 10 minutes have passed since the refrigerant was extracted, repeat the extraction process before opening the refrigerant circuit. Pressure could build up in the refrigerant circuit from continued evaporation.**

This refrigerant pressure and temperature sender - G395- is fitted in place of the high-pressure sender - G65- or air conditioning system pressure switch - F129- .

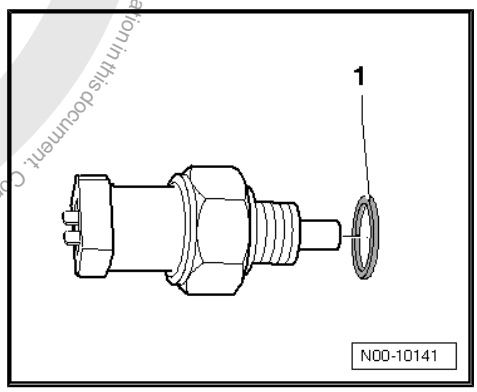

The pressure signal is monitored continuously, whereas the temperature signal is monitored only at temperatures greater than 0 ° C.

The Climatronic control unit - J255- works with this information and controls the coolant radiator fans accordingly and actuates the air conditioning system compressor regulating valve - N280- .

Copyright by Volkswagen AG. Volkswagen AG does not guarantee or accept any liability with respect to the correctness of information in this document. Copyright by Volkswagen AG.
satelettronica

5.4.8 Air conditioner compressor regulating valve - N280-

The regulating valve is fitted to the air conditioner compressor. It is activated by the operating and display unit for Climatronic air conditioning system - E87- or the Climatronic control unit - J255- The regulating valve influences the pressure on the low pressure side and thus the temperature at the evaporator.

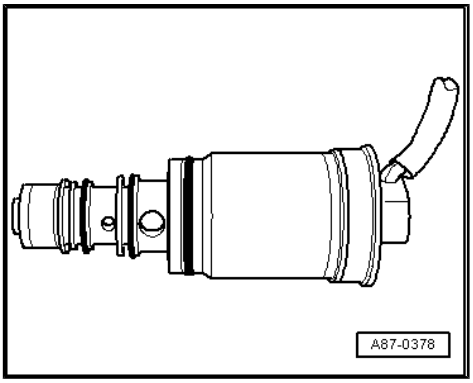

Note

The air conditioner compressor regulating valve - N280- is an integral part of the air conditioner compressor and cannot be renewed individually on all air conditioner compressors ⇒ Electronic parts catalogue .

5.5 Electrical components not installed in refrigerant circuit

5.5.1 Control and regulating unit for air conditioning system - J127-

The control and regulating unit switches off the flow of refrigerant via the 2nd evaporator if the temperature at the cooling ribs of the 2nd evaporator drops to the freezing point for water (anti-freeze protection).

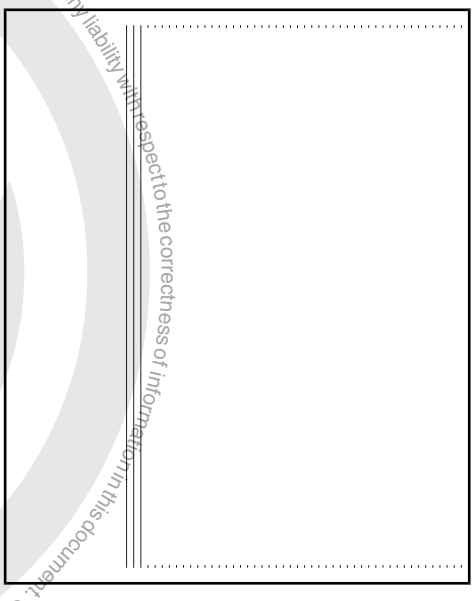

5.5.2 Radiator fan control unit - J293-

Note

Available in various designs, sometimes separately.

This control unit switches the magnetic clutch and thus the air conditioner compressor on and off. It controls the radiator fan, and for vehicles with high-pressure sender - G65- or refrigerant pressure and temperature sender - G395- , it calculates the pressure in the refrigerant circuit.

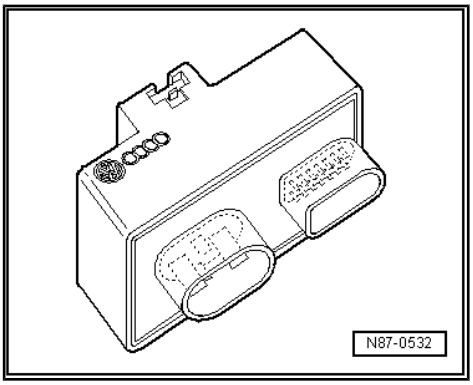

Protected by copyright. Copying for private or commercial purposes, in part or in whole is not permitted unless authorised by Volkswagen AG. Volkswagen AG does not guarantee or accept any liability with respect to the correctness of information in this document. Copyright by Volkswagen AG.
satelettronica

5.5.3 Radiator fan control unit - J293-

Note

Available in various designs, sometimes fitted to the radiator fan -arrows-.

This control unit switches the magnetic clutch and thus the air conditioner compressor on and off. It controls the radiator fan, and for vehicles with high-pressure sender - G65- or refrigerant pressure and temperature sender - G395- , it calculates the pressure in the refrigerant circuit.

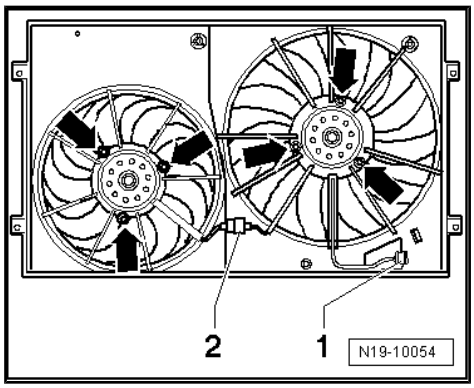

5.5.4 Temperature switch for evaporator - E33-

Function:

The temperature switch for evaporator - E33- senses the temperature between the cooling fins of the evaporator. It prevents the possibility of ice forming between the evaporator cooling fins by interrupting the current to the air conditioner compressor magnetic clutch if the temperature at the fins falls to the freezing point of moisture in the air.

The insertion depth of the sensor tube is marked on the device or is given in the repair manual ⇒ Rep. gr. 87 .

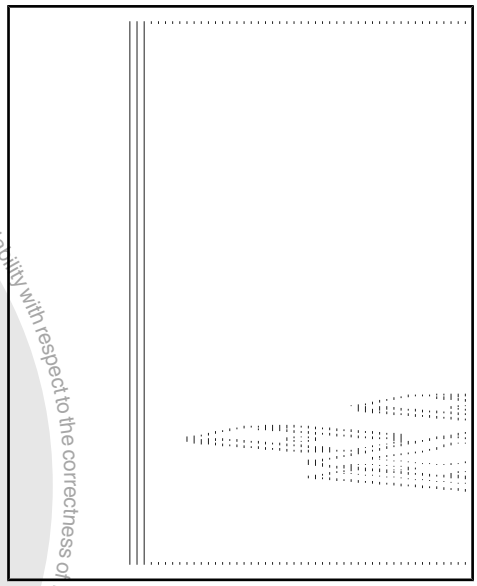

5.5.5 Evaporator output temperature sender - G263- or evaporator temperature sensor - G308-

Function:

The evaporator output temperature sender - G263- or evaporator temperature sensor - G308- reads the temperature downstream from the evaporator. This value is transmitted to the air conditioning system control unit and serves as a reference signal for regulating the air conditioner compressor. This prevents icing of the evaporator.

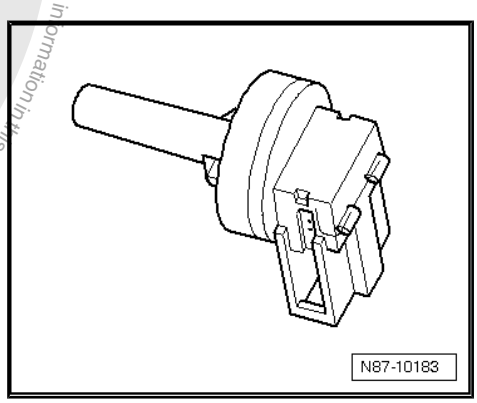

5.6 Pressures and temperatures in refrigerant circuit

The pressures and temperatures in the refrigerant circuit depend on the momentary operating conditions (e.g. engine speed, speed 1, 2, or 3 of radiator fan, engine temperature, whether air condi-

Reproduction for private or commercial purposes, in part or in whole, is not permitted unless authorised by Volkswagen AG. Volkswagen AG does not guarantee or accept any liability with respect to the correctness of information in this document. Copyright by Volkswagen AG.

satelettronica

tioner compressor is on or off) as well as environmental influences (e.g. ambient temperature, humidity, required cooling output).

In vehicles with air conditioner compressor regulating valve - N280- , the pressure on the low-pressure side is varied by activating the valve.

Therefore, the values given in the following tables may only be considered as guidelines. They occur at an engine speed of 1,500 to 2,000 rpm and an ambient temperature of 20°C after about 20 minutes.

The locations of connections provided for pressure measurements are vehicle-specific.

⇒ Rep. gr. 87

At 20°C and with the engine stopped, the refrigerant circuit will adjust itself to a pressure of 4.7 bar positive pressure ⇒ page 7 .

5.7 Refrigerant circuit with expansion valve

A- low-pressure side of the refrigerant circuit.

B- high-pressure side of the refrigerant circuit.

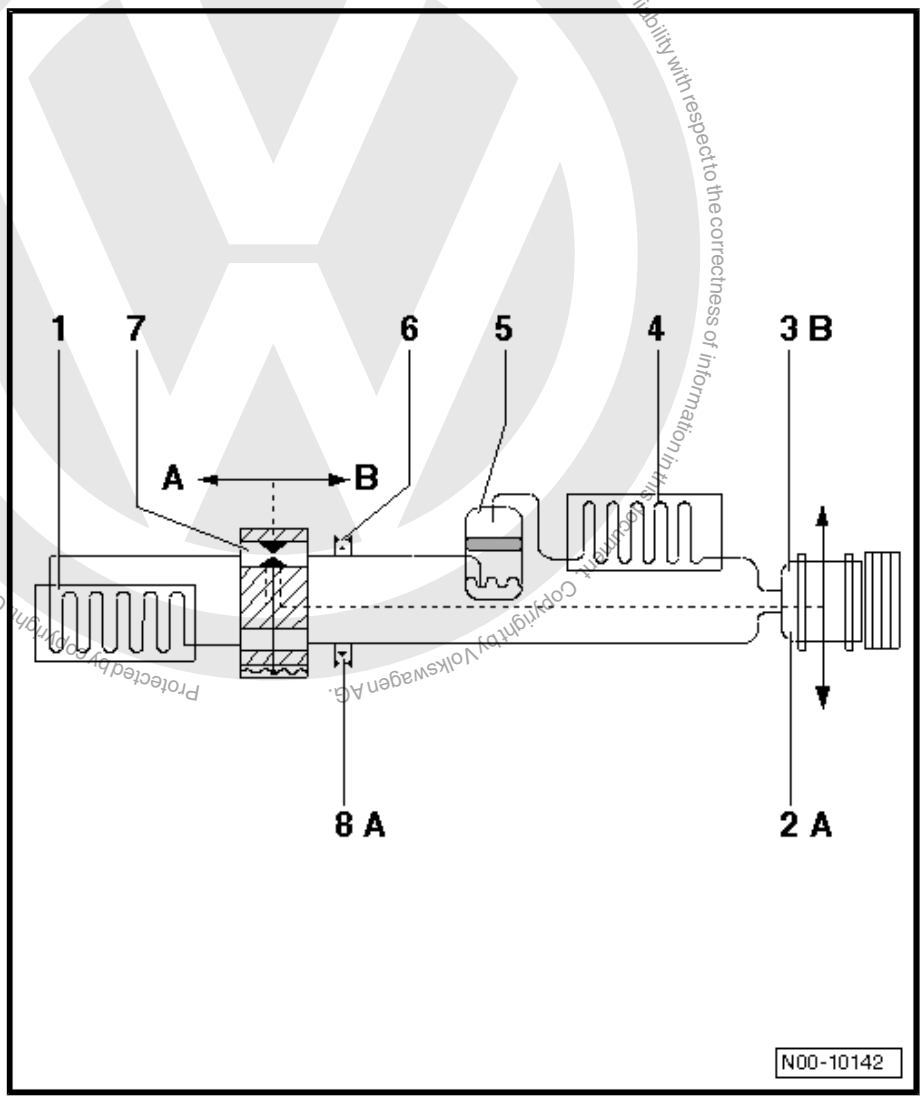

Protected by copyright. Copyright by Volkswagen AG. Volkswagen AG does not guarantee or accept any liability with respect to the correctness of information in this document. Copyright by Volkswagen AG. Copying for private or commercial purposes, in part or in whole, is not permitted unless authorised by Volkswagen AG.
satelettronica

Component	Refrigerant state	Pressure (bar)	Temperature in degrees Centigrade
-1- evaporator, from inlet to outlet	Vapour	approx. 1.2 bar[1)] (approx. 1.8 bar)[3)]	approx. -7°C[2)] (approx. -1°C)[3)]
-2- Air conditioning system compressor A-side	Gas	approx. 1.2 bar[1)] (approx. 1.8 bar)[3)]	approx. -1 °C (approx. +1 °C)[3)]
-3- Air conditioning system compressor B-side	Gas	approx. 14 bar	approx. +65 °C
-4- Condenser	Gas, vapour, liquid	approx. 14 bar	at outlet approx. + 55 °C
-5- Receiver	Liquid	approx. 14 bar	approx. +55 °C
-6- Extraction and charging valve, B side	Liquid	approx. 14 bar	approx. +55 °C
-7- Expansion valve	Liquid expanded to vapour	approx. 14 bar	approx. +55 °C, reduced to -7 °C
-8- Extraction and charging valve, A side	Gas	approx. 1.2 bar[1)] (approx. 1.8 bar)[3)]	approx. -7°C[2)] (approx. -1°C)[3)]

1) The pressure in refrigerant circuits with regulating air conditioner compressor is held to approx. 2 bar despite changing heat transport and differing engine speeds. This applies however only within the rated range of the air conditioner compressor; if the rated range of the air conditioner compressor is exceeded, the pressure will increase ⇒ page 161 .

2) The temperature in refrigerant circuits with regulating air conditioner compressor is held within the regulation range of the air conditioner compressor despite changing heat transport and differing engine speeds. This applies however only within the rated range of the air conditioner compressor; if the rated range of the air conditioner compressor is exceeded, the temperature will increase ⇒ page 161 .

3) Measured values for air conditioning systems with two evaporators

Protected by copyright. Copying for private or commercial purposes, in part or in whole, is not permitted unless authorised by Volkswagen AG. Volkswagen AG does not guarantee or accept any liability with respect to the correctness of information in this document. Copyright by Volkswagen AG.

Note

- *Air conditioning system compressors that do not self-regulate their load are switched off by the respective control unit via the air conditioner compressor regulating valve - N280- when an evaporator temperature less than 0°C is sensed.*
- *In vehicles with air conditioner compressor regulating valve - N280- , the pressure on the low-pressure side is varied by activating the valve.*

5.8 Refrigerant circuit with restrictor and reservoir

Arrows show direction of refrigerant flow

A- low-pressure side of the refrigerant circuit.

B- high-pressure side of the refrigerant circuit.

sateletronica

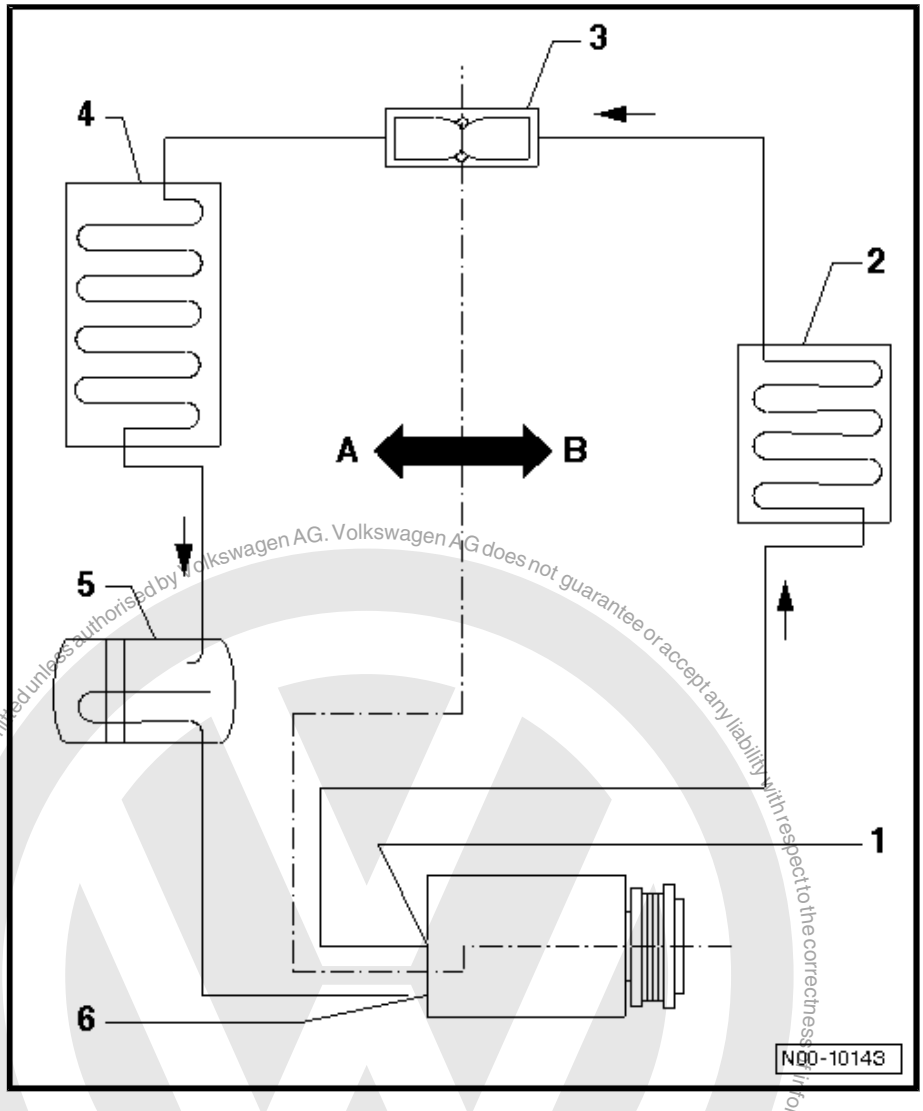

Component	Refrigerant state	Pressure (bar)	Temperature in degrees Centigrade
-1- Air conditioning system compressor B-side	Gas	up to 20 bar	to +70 °C
-2- Condenser	From gas to vapour to liquid	up to 20 bar	to +70 °C
-3- Restrictor	From liquid to vapour	B-side up to 20 bar, A-side greater than 1.5 bar	B-side up to +60 °C, A-side warmer than -4 °C
-4- Evaporator	From vapour to gas	Greater than 1.5 bar	Warmer than -4 °C
-5- Reservoir	Gas		
-6- Air conditioning system compressor A-side	Gas		

The pressures on the A-side are held at approx. 2 bar by the "regulating" air conditioner compressor even at differing engine speeds. This applies however only within the rated range of the air conditioner compressor; if the rated range of the air conditioner compressor is exceeded, the pressure will increase ⇒ page 161 .

Published by Volkswagen AG. Volkswagen AG does not guarantee or accept any liability with respect to the correctness of information in this document. Copying for private or commercial purposes, in part or in whole, is not permitted unless authorised by Volkswagen AG.

satelettronica

Note

In vehicles with air conditioner compressor regulating valve - N280- , the pressure on the low-pressure side is varied by activating the valve.

5.9 Test and measurement work that can be performed using a pressure gauge

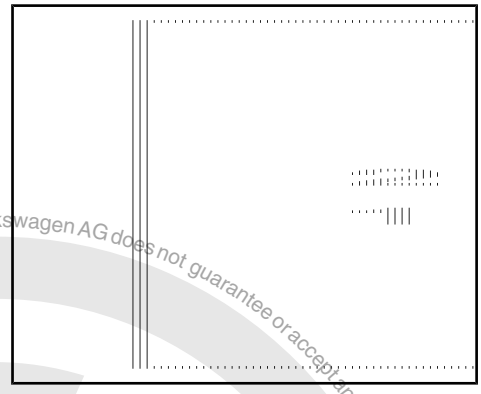

Indicated on pressure gauge

1 - Temperature scale for refrigerant R134a CF3–CH2F or CH2F–CF3.

2 - Pressure scale

In addition to the pressure scale, the pressure gauges can have one or more temperature scales. The scale values for R134a are assigned according to the vapour pressure table. Because different refrigerants have different vapour pressures at the same temperature, each temperature scale is labelled for the respective refrigerant.

5.9.1 Pressure gauges enable the following test and measurement work

a – Pressure and temperature measurement in the refrigerant circuit

- The high-pressure gauge allows the pressure and temperature to be measured with the air conditioning system switched on irrespective of whether this is at the outlet of the air conditioner compressor through the condenser up to the restriction (restrictor or expansion valve).
- The low-pressure gauge allows the pressure and temperature to be measured with the air conditioning system switched on irrespective of whether this is at the restriction (restrictor or expansion valve) through the evaporator up to the inlet to the air conditioner compressor.

Note

The relationship between pressure and temperature shown on the pressure gauge is valid only where the refrigerant in the circuit is liquid or vapour, but not when it is gas. In the gaseous state, the temperature is approx. 10°C to 30°C higher than indicated on the pressure gauge.

b – Evidence of refrigerant in a closed container

Refrigerant R134a is present in a closed container or refrigerant circuit if the temperature indicated on the pressure gauge corresponds to the temperature of the refrigerant (the temperature of a standing liquid stabilises at ambient temperature).

A closed container or switched-off refrigerant circuit is empty if the temperature indicated on the pressure gauge is below the temperature of the refrigerant.

Protected by copyright. Copying for private or commercial purposes, in whole or in part, is not permitted unless authorised by Volkswagen AG. Volkswagen AG does not guarantee or accept any liability with respect to the correctness of information in this document. Copyright by Volkswagen AG.
satelettronica

Note

The dependency between pressure and temperature described on the pressure gauge no longer applies when there is no liquid and the pressure is created by gas alone.

5.10 Air conditioner service and recycling equipment

At present, various manufacturers offer air conditioner service stations on the market for evacuating, cleaning and charging refrigerant in vehicle air conditioning systems.

5.10.1 Classification of extraction and charging devices in groups

Group 3:

Portable extraction and charging devices linking the air conditioning system to a fixed compressed gas container.

The fixed gas pressure vessel is charged with refrigerant or refrigerant/oil mixture. The portable extraction and charging device is then permanently attached to the pressure vessel. In accordance with § 3 section 5 no. 3 of the Regulations for Pressure Tanks, in this case the terms "compressed gas container" and "pressure tank" are equivalent.

Charging devices require:

- no approval and testing by officially recognised experts, because the gas is filled into compressed gas vessels which are equivalent to pressure vessels. (Devices for filling refrigerant from these pressure tanks into compressed gas containers that are intended for third-party use, in turn, require licensing and they are subject to checking by an authorised official.)

Note

The air conditioner service and recycling devices used in vehicle workshops are Group 3 extraction and charging devices which do not require a permit, but which can be operated only by skilled staff. Instructions for the operation and service of the devices may be found in the respective manufacturer's documentation.

5.10.2 Charging devices that do not require a permit

Charging devices that do not require a permit are mobile charging devices into which pressurised gases are charged into compressed gas containers for exclusive use of one company.

Note:

Some air conditioner service devices are charging devices that do not require a permit. When working with such equipment, the refrigerant is not transferred to mobile compressed-gas vessels, but rather into a permanently installed charging cylinder with visible level gauge and float switch.

Recommendation:

When surplus refrigerant is transferred for one's own requirements, it is recommended that a portable charging cylinder with visible level gauge and pressure relief valve be used.

Copyright by Volkswagen AG. Reproduction, in part or in whole, is not permitted unless authorised by Volkswagen AG. Volkswagen AG does not guarantee or accept any liability with respect to the correctness of information in this document.
satelettronica

Make sure to observe the corresponding technical rules (e.g. TRGS 400, TRGS 402, TRGS 407, TRGS 510, TRBS 3145/ TRGS 725) when handling compressed gases and, in particular, when filling compressed gases from one compressed gas container into another one.

5.11 Notes to repairs on refrigerant circuit

Special tools and accessories

The performance of proper workmanlike repairs on an air conditioning system

- Special tools and materials are required; these are listed on ⇒ page 199 .
- The essential information on the leak detector should be referred to ⇒ page 60 .
- Expert knowledge is necessary.

Note

Releasing refrigerant into the environment is not permitted *⇒ page 43* .

Protected by copyright. Copying for private or commercial purposes, in part or in whole, is not permitted unless authorised by Volkswagen AG. Volkswagen AG does not guarantee or accept any liability with respect to the correctness of information in this document. Copyright by Volkswagen AG.

satelettronica

6 Legal texts and regulations

6.1 Laws and regulations

Note

- *The laws and regulations listed below are valid in Germany. Other or additional laws and regulations may apply in other countries.*
- *Sources in other countries may be obtained from the responsible authorities.*

The effects concerning the changing climate can be seen worldwide. Protection of the climate is therefore one of the most important roles of the human race. This role is a huge challenge for all concerned.

The so called Kyoto Protocol defines, among other things, worldwide targets to protect the climate. This protocol defines apart from the reduction targets for carbon dioxide, the reduction targets for fluoride containing greenhouse gases e.g. for refrigerant R134a due to the high greenhouse potential.

Within Europe a large number of respective statutes exist for the motor industry. In Germany, for example, the Climate Protection Regulation Concerning Chemicals (Chemikalien-Klimaschutzverordnung) came into force from the 1st of August 2008 in addition to European legislation.

- Regulation (EC) No. 1005/2009
- Regulation (EC) No. 2037/2000
- Regulation (EU) No. 517/2014
- Regulation (EC) No. 706/2007
- Regulation (EC) No. 307/2008
- Directive 2006/40/EC
- Climate Protection Regulation Concerning Chemicals (Chemikalien-Klimaschutzverordnung), Closed Substance Cycle Waste Management Law (Kreislaufwirtschaftsgesetz, KrWG)

Maintenance and repairs to refrigerant circuits for air conditioning systems

All personnel performing maintenance and repairs on air conditioning systems for motorized vehicles must have attended the respective training programme and have the appropriate knowledge (certified). Other legislation may apply outside the European Union.

In general the following applies:

Operation, maintenance, decommissioning, duty to accept returned material

- It is prohibited to allow the release into the atmosphere of materials contained in products containing refrigerants during the operation, maintenance or removal from service of such products.
- The quantities used during operation and maintenance work should be documented (see Refrigerant Logbook, ⇒ Volkswagen InfoNet, Service handbook; Environmental protection; Environmental protection in the dealership and in the workshop; Emission protection; Air contaminating substances, re-

Copyright by Volkswagen AG. Volkswagen AG does not guarantee or accept any liability with respect to the correctness of information in this document. Copyright by Volkswagen AG. Copyright. Copy authorised by Volkswagen AG. Volkswagen AG does not guarantee or accept any liability with respect to the correctness of information in this document. Copyright by Volkswagen AG.
satelettronica

frigerant for vehicle air conditioning systems) so that a proof of use document is available for presentation to the responsible authorities upon request. A record sheet need no longer be kept within the EU due to respective European parliament legislation from 2005. Other legislation may apply in countries not belonging to the EU.

- Companies that sell materials and preparations listed in the above mentioned legislation have a duty to accept returned materials and preparations after they have been used, or to ensure that a specified third party will accept them.
- Maintenance work and decommissioning of products that contain refrigerant referred to in the above mentioned legislation. as well as the acceptance of returned substances and preparations referred to in this legislation may only be carried out by persons who have the necessary specialist knowledge and technical equipment.

Offences and breaches of the regulations

- A person is in breach of the regulations and laws referred to if that person performs acts of wilful misconduct or negligence when operating, performing maintenance work on or decommissioning products that contain the refrigerants referred to, contrary to the norms of technical practice, allows the substances contained in them to escape into the atmosphere or wilfully or negligently breaches the applicable regulations and laws mentioned above.

Make sure to observe the corresponding technical rules (e.g. TRGS 400, TRGS 402, TRGS 407, TRGS 510, TRGS 725, TRBS 3145) when handling compressed gases and, in particular, when filling compressed gases from one compressed gas container into another one.

Note

The following paragraphs are only extracts from the Technical Rules for Hazardous Substances (TRGS) (relevant for automotive manufacturers and workshops).

- TRGS 400 (Risk assessment for activities involving hazardous substances).
- TRGS 402 (Identification and assessment of the risks from activities involving hazardous substances: inhalation exposure).
- TRGS 407 (Risk assessment for activities involving gaseous substances).
- TRGS 510 (Storage of hazardous substances in non-stationary containers).
- TRBS 3145/TRGS 725 (Non-stationary compressed gas containers – charging, storage, in-house transportation, emptying).

Protected by copyright. Copying for private or commercial purposes, in any form and by any means, is not permitted without the express authorised by Volkswagen AG. Volkswagen AG does not guarantee or accept any liability with respect to the correctness of information in this document. Copyright by Volkswagen AG.
satelettronica

Note

- *The Technical Rules for Compressed Gases (TRG), the Technical Rules for Hazardous Substances (TRGS) and the Technical Rules for Operational Safety (TRBS) reflect the state of technology, occupational safety and health, occupational hygiene as well as other definite knowledge relating to provision and use of work equipment, operation of facilities requiring supervision and activities involving hazardous substances.*
- *The technical rules stated here are valid in the Federal Republic of Germany and do not necessarily reflect the rules and regulations valid in other countries.*

Make sure to observe the corresponding technical rules (e.g. TRGS 400, TRGS 402, TRGS 407, TRGS 510, TRGS 725, TRBS 3145) when handling compressed gases and, in particular, when filling compressed gases from one compressed gas container into another one.

- Filling stations – general provisions.
- Terms and definitions.
- Filling stations – set-up and operation.

Filling stations

- This does not apply to vehicle manufacturers and workshops.
- Filling stations are systems for charging non-stationary compressed gas containers. A filling station comprises its corresponding premises and equipment.
- Charging systems that require authorisation are charging systems which are filled with compressed gases in mobile compressed gas containers for transfer to other containers.
- Charging devices that do not require a permit are mobile charging devices into which pressurised gases are charged into compressed gas containers for exclusive use of one company.

Employees and instructing employees

Employees are to be instructed in the following points before beginning work as well as at regular, appropriate intervals, but at least annually:

- The particular hazards arising when handling compressed gases;
- The safety regulations, particularly the existing Technical Rules for Hazardous Substances (TRGS) and the Technical Rules for Operational Safety (TRBS);
- The actions to be taken in the event of defects, damage or accidents;
- The handing of fire extinguishers and protective equipment;
- The operation and maintenance of filling stations, with particular reference to the user's manual.

Filling stations may be operated and maintained only by persons who

- are at least 18 years of age;
- Possessing the necessary technical knowledge
- can be expected to fulfil their duties reliably.

Protected by copyright. Copying for private or commercial purposes, in part or in whole, is not permitted unless authorised by Volkswagen AG. Volkswagen AG does not guarantee or accept any liability with respect to the correctness of information in this document. Copyright by Volkswagen AG.
satelettronica

Charging pressure tanks (for tanks from other countries, other technical rules that are not mentioned here may apply).

- ♦ A compressed gas container may be charged only with the compressed gas that is listed on its label, and only up to the quantity indicated on the container in terms of pressure, weight and volume (see Regulations for Pressure Tanks).
- ♦ A container that can be used for different types of compressed gas must have a label on it listing the compressed gases with which it may be charged. If the compressed gas concerned has a tc ≥ -10°C (tc = critical temperature), the max. permissible charging weight in accordance with TRGS must also be indicated on the container before it is connected for charging.
- ♦ Gas pressure vessels for which the highest permissible charge positive pressure at 15°C is given in bar must be charged by pressure gauge. If during charging the temperature is different from 15°C, the pressure corresponding to the different temperature should be determined by the charging equipment; it must be ensured that the permissible overpressure for charging at 15°C in the gas pressure vessel is not exceeded. To determine possible overfilling, the charged vessels must be checked by way of random pressure measurements.
- ♦ Compressed gas containers on which the maximum permissible charging quantity is indicated by the net weight (charged weight, permissible weight of the contents) in kilograms must be charged according to weight (gravimetrically). The vessels are to be weighed during filling and subsequently subjected to a weight check on special scales to establish possible overfilling. Scales used for this purpose must be calibrated.
- ♦ Under particular conditions, gases with tc ≥ +70 °C from gas pressure vessels of no more than 150 l volumetric contents may be charged into a gas pressure vessel of no more than 1000 cc volumetric contents. The conditions of the TRGS apply to charging mechanic's bottles with liquid gas.
- ♦ For vehicle containers, different TRGS apply:

– For gases with tc ≥ +70 °C.

– For technical gas mixtures with tc ≥ +70 °C.

– Liquid, deep-cooled compressed gases in variance to those stated under item 4 may be charged by volume (volumetrically), if the charging device and/or the container with equipment is equipped with devices for measuring or limiting the volume of the charge and (except vehicle containers as specified under item 3) for measuring the temperature of the charge. When charging by volume it must be ensured that the permitted charge weight shown on the container is not exceeded. To determine possible overcharging, the charged containers are to be checked gravimetrically on a calibrated scale or – provided that the pressurised gases are not highly toxic – volumetrically. Volumetric checking presupposes that the appropriate equipment is in place; charging and checking equipment must be independent of each other.

- ♦ The fill and check measurements must not be performed by the same person. Check measurements must be performed immediately upon conclusion of the filling process.
- ♦ Overfilled vessels must be discharged immediately and in a safe manner down to the permissible fill quantity. Following this, the quantity of compressed gas charged must be determined once again.
- ♦ Some regulations of the TRGS 407 do not (fully) apply to containers for liquid, deep-cooled compressed gases which are

Volkswagen AG does not guarantee or accept any liability with respect to the correctness of information in this document. Copyright by Volkswagen AG.
Copying for private or commercial purposes, in part or in whole, is not permitted unless authorised by Volkswagen AG.
Translated by Google Translate, no guarantee

satelettronica

neither flammable nor toxic; regulations for traffic law remain unaffected.

- When gas pressure vessels are to be charged with gases in the liquid state at charging temperatures ≤ -20°C, the gas pressure vessel (if the vessel material is not tested for temperatures ≤ -20°C) must be released from the charging system for transportation only when the vessel wall has achieved a temperature ≥ +20°C.

Converting R12 refrigerant circuits to R134a refrigerant circuits and repairing them (retrofitting)

Note

- *Due to the environmental situation and the consequent legislation, refrigerant R12 is currently neither in production nor available. Refrigerant R134a has been developed as a replacement for R12.*
- *However, air conditioning systems developed and designed for refrigerant R12 cannot simply be charged with refrigerant R134a. To ensure trouble-free operation of the air conditioning system even after a retrofit, various components of the refrigerant circuit must be replaced.*
- *An exact description of the procedure for conversion and instructions for repair of converted refrigerant circuits can be found in the ⇒ Repair manual for air conditioning systems with refrigerant R12 parts 2 and 3 . This workshop manual is only available as a hard copy.*

Maintaining records on refrigerant

According to the environmental statistics law, a record concerning the use of refrigerants must be kept.

Car manufacture and repair businesses must be prepared to furnish information concerning use of refrigerants to the statistical office for the country in which the work is being performed. It is therefore recommended to keep records of the amounts of refrigerant handled during operation and maintenance (Refrigerant Logbook) ⇒ Volkswagen ServiceNet, Environmental Protection; Service handbook; Emission protection; Air contaminating substances, refrigerant for vehicle air conditioning systems) which must be available for presentation to the responsible authorities upon request.

Note

A record sheet need no longer be kept within the EU due to respective European parliament legislation from 2005. Other legislation may apply in countries not belonging to the EU.

6.2 Recycling and refuse law

Note

- *The laws and regulations listed below are valid in Germany. Other or additional laws and regulations may apply in other countries.*
- *Sources in other countries may be obtained from the responsible authorities.*

Protected by copyright. Copyright by Volkswagen AG. Volkswagen AG, Volkswagen AG does not guarantee or accept any liability with respect to the correctness of information in this document. Copyright by Volkswagen AG.
satelettronica

Statutes and regulations concerning the use and disposal of refrigerants and refrigerant machine oils are contained within the climate protective regulation concerning chemicals and closed substance cycle waste management and ensuring environmentally compatible waste disposal (only for the Federal Republic of Germany, in other countries other statutes and regulations may apply).

6.2.1 Disposal of refrigerant and refrigerant machine oil

Refrigerant

Refrigerants intended for disposal are to be transferred to marked recycling containers, observing the permissible filling quantity. Observe, for example in the Federal Republic of Germany, the Climate Protection Regulation Concerning Chemicals (Chemikalien-Klimaschutzverordnung) and the Closed Substance Cycle Waste Management Law (Kreislaufwirtschaftsgesetz, KrWG) (in other countries other statutes and regulations may apply).

Refrigerant oil

Disposal of used oils: Volkswagen InfoNet; Operation; Handbooks & dealer literature; Handbook Service; 15. Environmental protection; under general instructions follow the link “Environmental protection in the dealership and in the workshop”; 4. Waste disposal; 6. Disposal channels; Disposal of used oils; Refrigerant oils

Used refrigerant oils from systems with halogenated hydrocarbons (at least one hydrogen atom has been replaced by e.g the halogens fluorine, chlorine, bromine or iodine) must be disposed of as waste requiring particular care. They are not to be mixed with other oils or substances. Proper storage and disposal must be ensured in line with local regulations. Observe, for example in the Federal Republic of Germany, the Climate Protection Regulation Concerning Chemicals (Chemikalien-Klimaschutzverordnung) and the Closed Substance Cycle Waste Management Law (Kreislaufwirtschaftsgesetz, KrWG) (in other countries other statutes and regulations may apply).

satelettronica

Reference sources for technical rules and safety at work/accident prevention for the Federal Republic of Germany.

Sources in other countries may be obtained from the responsible authorities.

6.3 Converting R12 refrigerant circuits to R134a refrigerant circuits and repairing them (retrofitting)

Note

- *The laws and regulations listed below are valid in Germany. Other or additional laws and regulations may apply in other countries.*
- *Sources in other countries may be obtained from the responsible authorities.*
- *Due to the environmental situation and the consequent legislation, refrigerant R12 is currently neither in production nor available. Refrigerant R134a has been developed as a replacement for R12.*
- *However, air conditioning systems developed and designed for refrigerant R12 cannot simply be charged with refrigerant R134a. To ensure trouble-free operation of the air conditioning system even after a retrofit, various components of the refrigerant circuit must be replaced.*
- *An exact description of the procedure for conversion and instructions for repair of converted refrigerant circuits can be found in the ⇒ Repair manual for air conditioning systems with refrigerant R12 parts 2 and 3 . This workshop manual is only available as a hard copy.*

6.4 Maintaining records on refrigerant

Note

- *The laws and regulations listed below are valid in Germany. Other or additional laws and regulations may apply in other countries.*
- *Sources in other countries may be obtained from the responsible authorities.*

The quantities used during operation and maintenance work should be documented (see Refrigerant Logbook, ⇒ Volkswagen ServiceNet, Environmental Protection; Service handbook; Emission protection; Air contaminating substances, refrigerant for vehicle air conditioning systems) or proof of use document which must be available for presentation to the responsible authorities upon request. A record sheet need no longer be kept within the EU due to respective European parliament legislation from 2005. Other legislation may apply in countries not belonging to the EU.

Protected by copyright. Copying for private or commercial purposes, in part or in whole, is not permitted unless authorised by Volkswagen AG. Volkswagen AG does not guarantee or accept any liability with respect to the correctness of information in this document. Copyright by Volkswagen AG.

satelettronica

7 Refrigerant circuit

7.1 Important repair notes on air conditioning

- Air conditioning systems designed for refrigerant R12 must not be charged with refrigerant R134a until specific conversion measures have been performed ⇒ page 49 .
- The refrigerant oils specifically developed for R134a refrigerant circuits must never be mixed with the refrigerant oils specifically developed for R12 refrigerant circuits.
- Air conditioner service stations which come in contact with the refrigerant must be used only for the intended refrigerant.
- Components for R134a refrigerant circuits are identified by lettering or a green label, or are so designed (e.g. with different threads), that they cannot be confused with components for R12 refrigerant circuits.
- Within the engine compartment, on the bonnet catch striker plate or in the plenum chamber there is an information plate which states what refrigerant is used.
- Different refrigerants must never be mixed.

7.2 Converting refrigerant circuits from R12 refrigerant to R134a

Chlorofluorocarbon (CFC) is no longer used as a refrigerant in the automotive sector.

R12Converting refrigerant circuits from refrigerant R12 to refrigerant R134a and repairing the converted circuits.

➢ Repair manual for air conditioning systems with refrigerant R12 parts 2 and 3 . This workshop manual is only available as a hard copy.

Protected by copyright. Copying for private or commercial purposes, in part or in whole, is not permitted unless authorised by Volkswagen AG. Volkswagen AG does not guarantee or accept any liability with respect to the correctness of information in this document. Copyright by Volkswagen AG.

satelettronica

8 Working with the air conditioner service station

Copyright by Volkswagen AG. Volkswagen AG does not guarantee or accept any liability with respect to the correctness of information in this document. Copy or transmission to third parties not permitted unless authorised by Volkswagen AG.

Note

- *Volkswagen AG does not authorise the use of chemical substances (leak inhibitor additives) for purposes of sealing leaks in refrigerant circuits. There are currently no permanent, effective or material compatible tests that guarantee never causing damage or malfunctions in an air conditioning system or air conditioner service station.*
- *The leak inhibitor additives currently available on the market have differing physical and chemical characteristics that may subsequently affect the function of the air conditioning system and air conditioner service station or even cause a total failure.*
- *Volkswagen rejects the use of chemical substances for purposes of sealing leaks in refrigerant circuits.*
- *Chemical substances used for sealing leaks in refrigerant circuits often react with the surrounding air and the humidity contained within. They cause deposits to build up in the refrigerant circuit (and your air conditioner service station), valves to malfunction and defects in other components with which they come into contact. These deposits cannot be completely removed from the components.*
- *It is often not possible to detect from the outside whether chemical substances have been used to seal leaks in the refrigerant circuit. The adhesive label that serves to identify its use can usually not be found. Therefore, exercise caution on vehicles for which you have no service or repair record.*
- *Containers or tanks are offered as accessories on the open market that are designed to separate these chemical substances (to seal leaks). Since Volkswagen rejects the use of these substances, no statement can be made at this point regarding the effectiveness and separation rate of these filters.*

8.1 Important instructions for working with the air conditioner service station

- The fitted filter and dryer must be renewed at the latest when the operational time specified in the related operating instructions has been reached.
- Fill only with refrigerant oils which have been approved for the vehicle-specific refrigerant circuit.

⇒ Electronic parts catalogue (ETKA)

Refrigerant that has been extracted may not be reused, even after cleaning within the station, in any of the following circumstances:

- If there is damage to the air conditioner compressor, such that decomposition of the refrigerant due to overheating might have occurred.
- If there are dark sticky deposits in the refrigerant circuit (these can be detected only by opening up the system).
- If there is any doubt about the composition of the refrigerant extracted from the refrigerant circuit.

In all of these circumstances the air conditioner service station must be drained ⇒ page 53 , the system must be cleaned and the filter, dryer and any filled refrigerant oil must be renewed.

satelettronica

Contaminated refrigerant can, e.g. in the Federal Republic of Germany, be returned to the supplier in so-called recycling bottles for recycling or for environmentally sound disposal (in other countries other or additional regulations may apply).

The commercially available air conditioner service stations can be divided into 2 groups:

- A. Air conditioner service stations that clean the extracted refrigerant for reuse (so-called evacuating and recycling stations) e.g. air conditioner service station .
- B. Air conditioner service station, called extraction stations, that charge the extracted refrigerant into recycling bottles (for reprocessing in bulk).

8.2 Connecting a air conditioner service station for measuring and testing

- Depending on the type of equipment chosen, there may be variations in the required procedure; therefore always follow the user's manual for the equipment being used.

Note

Always follow the procedure described in the user's manual for your air conditioning service station .

The charging hoses must only be connected according to the following work procedure to prevent air or moisture from entering the refrigerant circuit:

– Switch off ignition.

– Connect the air conditioner service station to the power supply.

– Unscrew sealing caps from service station connections or from connections with valve (see vehicle-specific refrigerant circuit).

⇒ Rep. gr. 87

– Evacuate charging hose.

Note

Connect the charging hose to the service connections of the refrigerant circuit using quick-release couplings.

NOTICE

Risk of damage to the air conditioner compressor or air conditioner service station.

Opening the valves with the air conditioning system switched on can cause a short circuit between the high pressure and low pressure side.

– **Never open valves on the high pressure or low pressure side with the air conditioning system switched on.**

– Turn hand wheel into quick-release coupling adapter until the valve in the service connection is definitely open (observe pressure gauge; do not over-tighten valve).

– Start the engine and perform the planned tests and measurements.

Protected by copyright. Copying for private or commercial purposes, in part or in whole, is not permitted unless authorised by Volkswagen AG. Volkswagen AG does not guarantee or accept any liability with respect to the correctness of information in this document. Copyright by Volkswagen AG.
satelettronica

– Compare determined values with specifications ⇒ page 161 .

– Before disconnecting the quick-release coupling, close it by turning out the handwheel.

8.3 Drain the refrigerant circuit using the air conditioner service station .

- Depending on the type of equipment chosen, there may be variations in the required procedure (always follow user's manual for the equipment being used).
- The refrigerant circuit must be discharged if parts of the refrigerant circuit are to be removed, if there is any doubt about the quantity of refrigerant in the circuit or if required by the safety precautions.
- All operational instructions important for working with the air conditioning service station for refrigerants can be found in the air conditioning service station user's manual.

Draining

– Switch off ignition.

– Connect the air conditioning service station to the service connections as described in the user's manual for the vehicle ⇒ Rep. gr. 87 and start the service station.

Note

- *Sometimes, refrigerant oil is extracted from the refrigerant circuit along with the refrigerant and there is no way of stopping this. To ensure lubrication of the air conditioner compressor, the refrigerant oil quantity should be topped up with fresh oil ⇒ Rep. gr. 87 .*
- *On vehicles with air conditioner compressor and no magnetic coupling (with air conditioner compressor regulating valve -N280-) the engine should only run for less than 10 minutes with empty refrigerant circuit and closed refrigerant circuit (the air conditioner compressor runs with it continually). The engine speed must not exceed 2000 rpm.*
- *On vehicles with air conditioner compressor and magnetic coupling, the engine may be started as the air conditioning system pressure switch -F129- or high-pressure sender -G65- (checks whether refrigerant is in the circuit) switches off the magnetic coupling as soon as there is no refrigerant in the refrigerant circuit.*

8.4 Evacuating refrigerant circuit using air conditioner service station

- Always follow the procedure described in the user's manual for your air conditioning service station .
- The procedure described here is that for the air conditioning service station .

Before the refrigerant circuit is charged with refrigerant, it should be evacuated (air empty) for 45 minutes for single evaporator system and 60 minutes for 2 evaporator systems. In addition, moisture is removed from the circuit.

Leakage can be determined when evacuating the refrigerant circuit.

Protected by copyright. Copying for private or commercial purposes, in part or in whole, is not permitted unless authorised by Volkswagen AG. Volkswagen AG does not guarantee or accept any liability with respect to the correctness of information in this document. Copyright by Volkswagen AG.
satelettronica

Evacuating

NOTICE

Risk of damage to air conditioner compressor if refrigerant circuit is empty.

– **Never start the engine if the refrigerant circuit is empty.**

– Switch off ignition.

– If necessary, check the refrigerant oil quantity in the refrigerant circuit; see vehicle-specific repair manual ⇒ Rep. gr. 87 .

– Connect the air conditioner service station to the power supply.

– Check the refrigerant quantity in the air conditioning service station .

– Connect the charging hose of the air conditioning service station to the vehicle refrigerant circuit using quick-release connector adapters (see vehicle-specific refrigerant circuit).

⇒ Rep. gr. 87

– Turn the handwheel of the quick-release coupling adapter far enough inwards to ensure that the valves on the service connections are open (do not overstress the valve).

Note

Where a vehicle has a service connection on only one side of the refrigerant circuit, if the system pressure has to be measured after charging, use the valve adapter and charging hose with valve opener.

– Check the vacuum phase in the air conditioning service station . The refrigerant circuit will be evacuated automatically (observe preset evacuation period).

When the vacuum phase has been completed, the leakage test of the refrigerant circuit will start. The displays show the vacuum in bar and the time in seconds.

If the vacuum is not maintained, proceed as follows:

– Check the vacuum phase in the air conditioning service station again. The refrigerant circuit will be evacuated automatically (observe preset evacuation period). Observe vacuum gauge for a longer period. Only when a vacuum is maintained can charging commence.

♦ If there is a leak so major that it causes air to escape to such a degree during evacuation that the air conditioner service station is incapable of generating a sufficient vacuum or the vacuum gauge indicates immediately after switching off the air conditioner service station that air has entered the system and negative pressure is lost.

– Search for the leak in the refrigerant circuit as follows:
⇒ page 57

8.5 Filling refrigerant circuit with air conditioner service station .

- Always follow the procedure described in the user's manual for the air conditioning service station .
- Before charging the refrigerant, check the refrigerant oil quantity ⇒ Rep. gr. 87 .

satelettronica

- The entire refrigerant charging quantity can be introduced either into the high-pressure or the low-pressure side.

Charging refrigerant circuit

– Switch off ignition.

– Evacuate the refrigerant circuit with the air conditioner service station ⇒ page 53 .

– Unscrew handwheel on quick-release coupling adapter (to close).

– Allow refrigerant to flow into charging hose.

– Screw handwheel of quick-release coupling adapter inwards (do not overstress the valve) and charge system with prescribed quantity of refrigerant.

– Switch off air conditioning service station .

Note

If the air conditioner compressor was removed, the V-belt pulley / freewheel must be turned by hand approx. 10 times prior to initial operation. This does not apply for the electrical air conditioner compressor. This prevents any damage occurring from a fluid hammer in the air conditioner compressor when the air conditioning system is switched on for the first time. If there is oil in the cylinder of the air conditioner compressor, it will be forced out by the rotation.

– Start engine with air conditioner compressor switched off (version with magnetic clutch).

– Set air conditioner compressor to lowest possible setting; select "ECON" mode or "A/C Off" (if version without magnetic clutch but with regulating valve).

– Wait until idling speed has stabilised:

– Switch air conditioner compressor on and let system run for at least 2 minutes with engine idling.

– If necessary, check the pressures in the refrigerant circuit, using the air conditioning service station .

– Switch off engine.

– Turn out handwheel on quick-release coupling adapter.

– Detach the charging hose from the refrigerant circuit.

– Screw protective caps back on.

8.6 Bringing air conditioning system into service after charging

Note

If the air conditioner compressor was removed, the V-belt pulley / freewheel must be turned by hand approx. 10 times prior to initial operation. This prevents any damage occurring from a fluid hammer in the air conditioner compressor when the air conditioning system is switched on for the first time. If there is oil in the cylinder of the air conditioner compressor, it will be forced out by the rotation.

Protected by copyright. Copying for private or commercial purposes, in part or in whole, is not permitted unless authorised by Volkswagen AG. Volkswagen AG does not guarantee or accept any liability with respect to the correctness of information in this document. Copyright by Volkswagen AG.

satelettronica

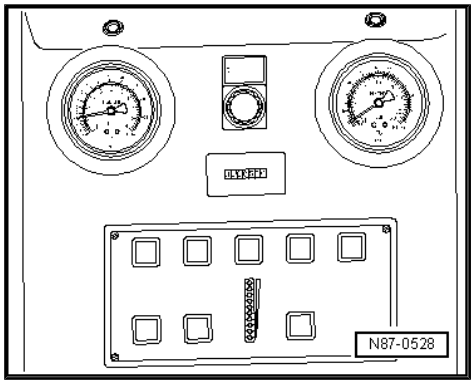

- Start engine with air conditioner compressor switched off (version with magnetic clutch).
- Set air conditioner compressor to lowest possible setting; select “ECON” mode or “A/C Off” (if version without magnetic clutch but with regulating valve).
- Wait until idling speed has stabilised:
- Switch air conditioner compressor on and let system run for at least 2 minutes with engine idling.
- If necessary, check the pressures in the refrigerant circuit, using the air conditioning service station .
- Switch off engine.
- Turn out handwheel on quick-release coupling adapter.
- Detach the charging hose from the refrigerant circuit.
- Screw protective caps back on.

8.7 Charging the container in the air conditioning service station with refrigerant

- Always follow the procedure described in the user's manual for your air conditioning service station .
- A certain quantity of refrigerant is specified as charge for each air conditioning system. To ensure that the system is neither overcharged nor undercharged with refrigerant (both circumstances will impair the function of the air conditioning system), the refrigerant container is on a weighing machine.

8.8 Emptying air conditioner service station

Note

- *If it becomes necessary to drain the air conditioning service station (e.g. because contaminated refrigerant was extracted), all filters and dryers are to be renewed as a rule. Do not take the filters and dryers out of their airtight packaging until immediately prior to installation in order to keep moisture absorption (hygroscopic property) as low as possible.*
- *Refrigerant bottles filled with contaminated, used refrigerant are known as “recycling bottles”.*
- *Recycling bottles must be evacuated as a rule before being filled for the first time with refrigerant. Refrigerant bottles that have air in them must not be filled with refrigerant.*
- *Different types of refrigerants must not be mixed with each other. Mixed refrigerants cannot be processed for reuse. They have to be disposed of. If there is any doubt about the composition of the contents of the container, the refrigerant recycler is to be informed accordingly.*

Volkswagen AG. Volkswagen AG does not guarantee or accept any liability with respect to the correctness of information in this document. Copyright by Volkswagen AG.
satelettronica

9 Detecting leaks in refrigerant circuit

Note

- *Different processes are described in this workshop manual for leak detection in the refrigerant circuit. These processes have been tested and lead to a positive result under the different conditions of use if the application is carried out correctly and in accordance with the complaint.*
- *When leak detection using compressed air/nitrogen or vacuum does not produce results, use electronic leak detector or UV leak detector additive.*
- *Small leaks can be detected with, for example, an electronic leak detector or a UV leak detector lamp.*
- *A wide range of processes are offered on the open market for finding leaks in refrigerant circuits. These processes do not always produce conclusive results. If they are not used precisely according to the specifications, they may even cause components of the refrigerant circuit to develop leaks where there were none before. Furthermore, certain processes can cause preliminary or permanent damage to the components of the refrigerant circuit*
- *Components that are found to be leaking must not be repaired. They have to be replaced with genuine parts.*
- *A leaking refrigerant circuit must not be charged with refrigerant, therefore evacuate an empty refrigerant circuit and check for leaks before charging the system with refrigerant* *⇒ page 53* .

Note

- *Volkswagen rejects the use of chemical substances for purposes of sealing leaks in refrigerant circuits.*
- *Chemical substances used for sealing leaks in refrigerant circuits often react with the surrounding air and the humidity contained within. They cause deposits to build up in the refrigerant circuit (and your air conditioner service station), valves to malfunction and defects in other components with which they come into contact. These deposits cannot be completely removed from the components (not even by flushing).*
- *It is often not possible to detect from the outside whether chemical substances have been used to seal leaks in the refrigerant circuit. The adhesive label that serves to identify its use can usually not be found. Therefore, exercise caution on vehicles for which you have no service or repair record.*
- *Containers or tanks are offered as accessories on the open market that are designed to separate these chemical substances (to seal leaks). Since Volkswagen rejects the use of these substances, no statement can be made at this point regarding the effectiveness and separation rate of these filters.*

Copyright by Volkswagen AG. Volkswagen AG does not guarantee or accept any liability with respect to the correctness of information in this document.
satelettronica

9.1 Leak detection in refrigerant circuit using compressed air or nitrogen

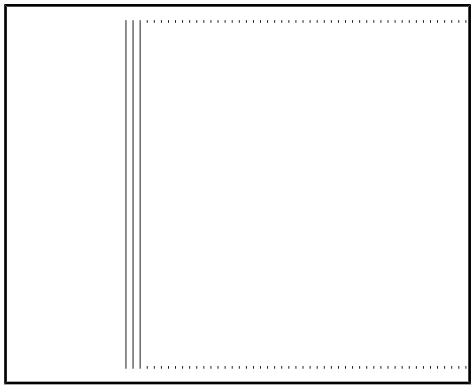

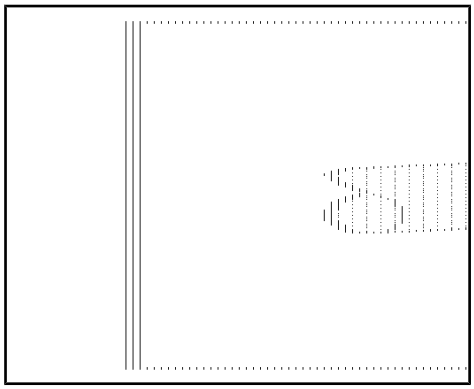

Protected by copyright. Copying for private or commercial purposes, in part or in whole, is not permitted unless authorised by Volkswagen AG. Volkswagen AG does not guarantee or accept any liability with respect to the correctness of information in this document. Copyright by Volkswagen AG.

satelettronica

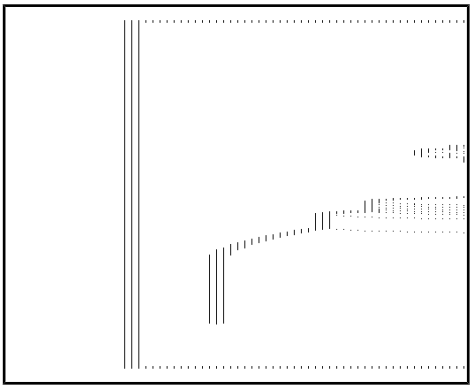

Note

- *A leak in the refrigerant circuit can be detected, for example, by pressurising the circuit to a maximum of 15 bar using cleaned and dried compressed air or nitrogen ⇒ page 68 . If the leak is large, the leakage point can be detected by sound as the air or gas escapes.*
- *Introduce the compressed air or the nitrogen through the service connection.*
- *The quick-release coupling adapter for service connection can be fitted with a modified charging hose -A- (e.g. with a 5/8"-18 UNF thread, depending on the thread of the quick-release coupling adapter) and a suitable adapter -B- to connect to the workshop compressed air system ⇒ page 207 . To ensure that no moisture, oil or dirt from the workshop compressed air system enters the refrigerant circuit of the air conditioning system, use e.g. a combination fine filter unit for compressed air systems with an oil, dirt and water separator, which is commonly used in paint spraying facilities. Install this between the compressed air system and the charge hose -A- ⇒ Workshop equipment catalogue .*
- *Using the manifold gauge with pressure reducer for nitrogen (maximum reduced pressure: 15 bar) -1- you can connect a gas cylinder -3- filled with nitrogen via a charging hose -2- (e.g. with 5/8"-18 UNF threaded connection) to the service connection (to which a quick-release coupling adapter is connected) of the closed refrigerant circuit. ⇒ page 207*

– Slowly increase pressure in refrigerant circuit to a maximum of 15 bar.

CAUTION

Risk of injury from nitrogen escaping under high pressure.

– Use pressure limiter for nitrogen tank.

– Search for leak by sound, which is created by the escaping gas. Use Ultrasonic tester - V.A.G 1842- to ease localisation of sounds.

– Press nitrogen out of refrigerant circuit using cleaned and dried compressed air. Nitrogen must not enter the service cylinder. This prevents the service cylinder from being filled with condensible gases.

– Rectify leak.

– Evacuate again and observe the vacuum display over a period of hours. Only when a vacuum is maintained can charging commence.

- If a leak is present of a size where no or very little air is drawn in and the air conditioning service station can create sufficient vacuum. The vacuum gauge does not increase or increases very slowly after switching the air conditioner service station off. This indicates that there may be a very small ingress of air and the vacuum is lost.

– Charge circuit with 100 g of refrigerant and search for the possible leak using an electronic leak tester and rectify fault as necessary ⇒ page 60 or add an approved UV contrast substance to the refrigerant and search for the possible leak in the circuit using leak detector system VAS 6201 or later model and rectify fault as necessary ⇒ page 60 .

– Evacuating refrigerant circuit if necessary ⇒ page 53

satelettronica

– Evacuate refrigerant circuit and observe the vacuum gauge over a period of hours. Only when a vacuum is maintained can charging commence.

9.2 Searching for leaks in refrigerant circuits using leak detector - V.A.G 1796-

Note

Small leaks can be detected with, for example, an electronic leak detector.

– Evacuate refrigerant e.g. with air conditioning service station ⇒ page 53 .

Note

- *If a larger leak is detected during the evacuation process, determine cause and rectify as described* *⇒ page 53* *.*
- *If during the evacuation process no leak is detected or a very small leak is detected that but cannot be located, proceed as follows* *⇒ page 58* *.*
- *Refrigerant gas is quickly dispersed by movement of air. Draughts must therefore be avoided during leak detection.*
- *If the refrigerant circuit is completely empty, charge with about 10 % of refrigerant capacity (sticker R134a or vehicle-specific workshop manual).*

Leak search:

– Start the leak detector according to the operating instructions.

– Always hold probe tip under location of suspected leak.

If clicking rate increases or a warning tone sounds (depends on model), this indicates that the leak has been located (refer to operating instructions for leak detector).

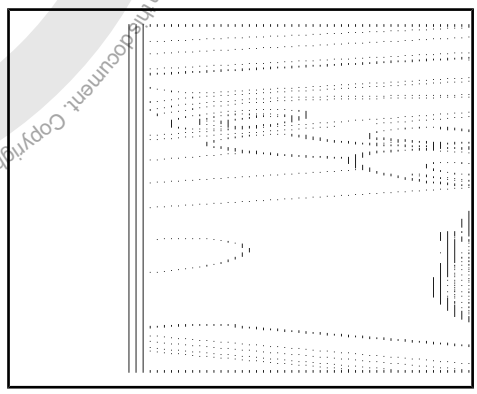

9.3 Detecting leaks in refrigerant circuit using leak detecting system - VAS 6196- or leak detecting system - VAS 6201- or a later model

Note

Small leaks can be detected with, for example, an UV leak detector additive.

Protected by copyright. Copyright by Volkswagen AG.
Copyright by Volkswagen AG, Volkswagen Aktiengesellschaft. It is not permitted to copy or make accessible to other persons or companies this document or any part thereof for purposes other than those for which it was made available, nor to communicate its contents to persons not authorised to receive it, unless authorised by Volkswagen AG. Volkswagen AG does not guarantee or accept any liability with respect to the correctness of information in this document. Copyright by Volkswagen AG.
satelettronica

– Evacuate refrigerant e.g. with air conditioning service station ⇒ page 53 .

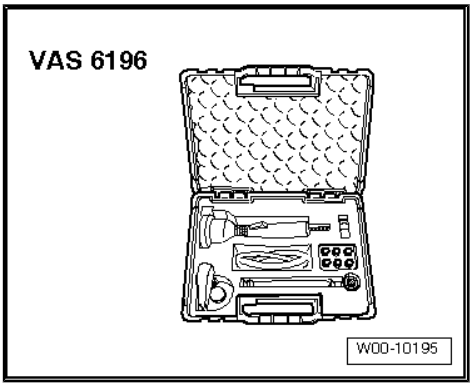

Note

- *If a larger leak is detected during the evacuation process, determine cause and rectify as described* *⇒ page 53* *.*
- *If during the evacuation process no leak is detected or a very small leak is detected that but cannot be located, proceed as follows* *⇒ page 58* *.*
- *Refrigerant gas is quickly dispersed by movement of air. Draughts must therefore be avoided during leak detection.*
- *If the refrigerant circuit is completely empty, charge with about 10 % of refrigerant capacity (sticker R134a or vehicle-specific workshop manual).*

Leak detecting system - VAS 6196-

or

Leak detecting system - VAS 6201- or later model

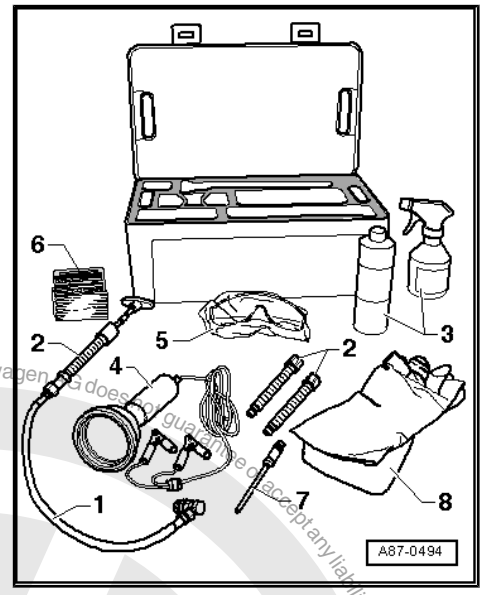

1 - Hand pump with low-pressure service hose, service coupling and non-return valve - VAS 6201/1-

2 - Cartridge - VAS 6201/2-

3 - Cleaning agent - VAS 6201/3-

4 - UV leak detector lamp - VAS 6201/4-

5 - UV absorbing eye protection - VAS 6201/6-

6 - Stickers - VAS 6201/7-

7 - Tube
VAS 6201 8

8 - Safety gloves - VAS 6201/9-

Pouring in leak detection additive with refrigerant circuit empty

The cartridge -A- contains 15.4 ml of leak detecting additive (one unit -B- equates to 2.5 ml).

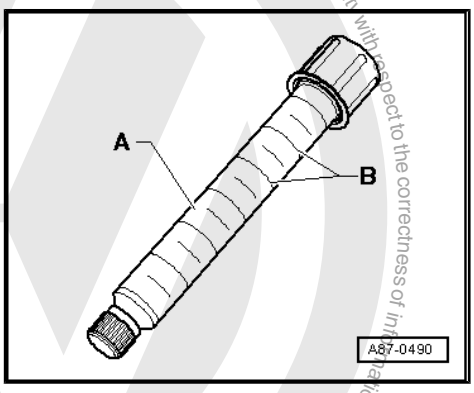

Protected by copyright. Copying for private or commercial purposes, in part or in whole, is not permitted unless authorised by Volkswagen AG. Volkswagen AG does not guarantee or accept any liability with respect to the correctness of information in this document. Copyright by Volkswagen AG.
satelettronica

– Assemble hand pump - VAS 6201- item -1- and cartridge item -2- -VAS 6201/2- .
– Connect filler hose - VAS 6201/8- (⇒ page 61 item -7-) to hand pump.
– Open service valve of hand pump.

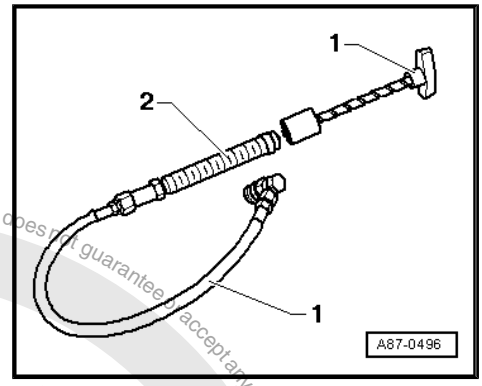

Protected by copyright. Copying for private or commercial purposes, in part or in whole, is not permitted unless authorised by Volkswagen AG. Volkswagen AG does not guarantee or accept any liability with respect to the correctness of information in this document. Copyright by Volkswagen AG.

satelettronica

When the refrigerant circuit is empty, the leak detection additive can best be poured in via an open connection.

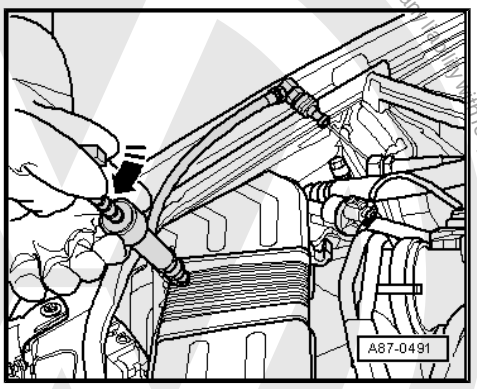

- Open the refrigerant circuit at a readily accessible connection.
- Cover the surrounding area with sheeting or absorbent paper.
- Hold tube upwards.
- Turn T-bar of hand pump until the leak detecting additive flows out of the tube.
- Inject 2.5 ± 0.5 ml (millilitre = cm^3) of leak detecting additive into the refrigerant circuit.

Note

Note the following, if a leak detecting additive has been injected during a previous repair of the refrigerant circuit, only inject new leak detecting additive if the refrigerant machine oil has been replaced. If only some of the refrigerant machine oil was replaced then only the respective amount of leak detecting additive should be injected. If for example 100 ml of machine oil was replaced on a vehicle with 250 ml of refrigerant machine oil, inject only 1 ml (cm^3) of leak detecting additive.

- Renew O-rings at opened connection.
- Assemble refrigerant circuit.
- Attach a label, close to the service connection, which has information showing that the refrigerant circuit has been injected with a leak detecting additive.
- Evacuate and fill the refrigerant circuit as per specifications ⇒ page 53 and ⇒ page 54 .
- Start air conditioning system.

Note

The air conditioning system must be operated for at least 60 minutes to ensure that the injected leak detecting additive is distributed throughout the entire refrigerant circuit (air conditioner compressor must run). The leak may become visible after a short period, but this depends on the size of the leak.

- Use UV lamp VAS 6196/4 to search for the leak in the refrigerant circuit ⇒ page 65 .

Note

Using cleaning solution - VAS 6201/3- , clean the engine compartment and, if necessary, the components of the refrigerant circuit, to remove leak detection additive residue left from the repair work.

Protected by copyright. Copyright by Volkswagen AG. Volkswagen AG does not guarantee or accept any liability with respect to the correctness of information in this document. Copyright by Volkswagen AG. Reproduced unless authorised by Volkswagen AG. Not permitted for commercial purposes, in part or in whole, without permission.
satelettronica

Pouring in leak detection additive with refrigerant circuit charged

Protected by copyright. Copying for private or commercial purposes, in part or in whole, is not permitted unless authorised by Volkswagen AG. Volkswagen AG does not guarantee or accept any liability with respect to the correctness of information in this document. Copyright by Volkswagen AG.

Note

- *Note the following, if a leak detecting additive has been injected during a previous repair of the refrigerant circuit, only inject new leak detecting additive if the refrigerant machine oil has been replaced. If only some of the refrigerant machine oil was replaced then only the respective amount of leak detecting additive should be injected. If for example 100 ml of machine oil was replaced on a vehicle with 250 ml of refrigerant machine oil, inject only 1 ml (cm^3) of leak detecting additive.*
- *A small amount of leak detecting additive remains in the service connection. This is to be carefully removed so as to avoid subsequent erroneous leak detection.*

The cartridge -A- contains 15.4 ml of leak detecting additive (one unit -B- equates to 2.5 ml).

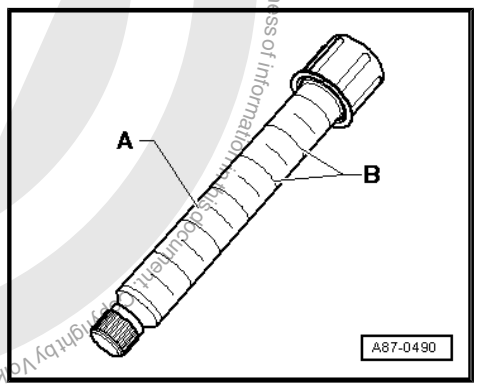

– Switch off ignition.
– Remove sealing cap from service connection on low-pressure side of refrigerant circuit.
– Assemble hand pump - VAS 6201- item -1- and cartridge item -2- -VAS 6201/2- .

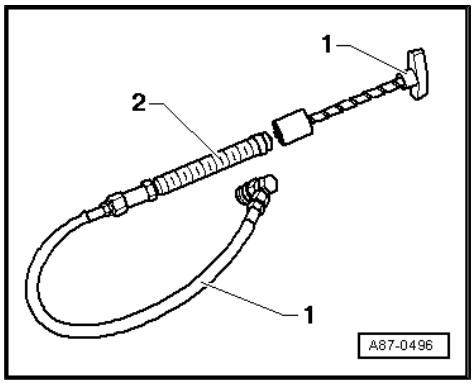

Note

Ensure the hose of the hand pump is completely filled with leak detecting additive.

– Fit the quick release coupling to the service connection of the low-pressure side and open the service coupling by turning the hand wheel. Hold hose upwards and turn T-bar of hand pump until the leak detecting additive starts to flow out of the tube.

– Cover area of service connection on vehicle with foil or absorbent paper.
– Turn T-bar of hand pump and inject 2.5 ± 0.5 ml (millilitre = cm^3) of leak detecting additive into the refrigerant circuit.

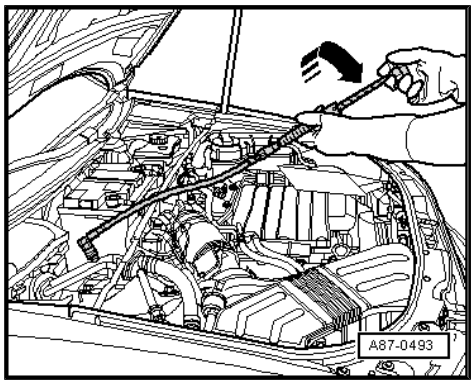

satelettronica

– Close the service coupling and remove it from the service connection.
– Remove the remains of the leak detecting additive from the service connection, with for example, absorbent paper.
– Seal service connection using sealing cap.
– If necessary, use cleaning agent to clean area around service connection.
– Attach a label, close to the service connection, which has information showing that the refrigerant circuit has been injected with a leak detecting additive.
– Start air conditioning system.

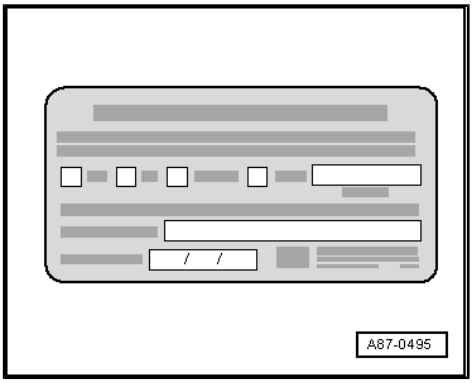

Note

The air conditioning system must be operated for at least 60 minutes to ensure that the injected leak detecting additive is distributed throughout the entire refrigerant circuit (air conditioner compressor must run). The leak may become visible after a short period, but this depends on the size of the leak.

- Use UV lamp VAS 6196/4 to search for the leak in the refrigerant circuit ⇒ page 65 .

Note

Using cleaning solution - VAS 6201/3- , clean the engine compartment and, if necessary, the components of the refrigerant circuit, to remove leak detection additive residue left from the repair work.

Searching for leaks in the refrigerant circuit using UV lamp VAS 6196/4

CAUTION

Risk of eyes being dazzled by UV light.
- **Wear safety goggles.**
- **Never glare into the UV lamp.**
- **Never point a UV lamp at another person.**

Protected by copyright. Copyright for private or commercial purposes, in part or in whole, is not permitted unless authorised by Volkswagen AG. © Volkswagen AG, Wolfsburg. All rights reserved. Copyright by Volkswagen AG. No liability for accept and liability with respect to the correctness of information in this document.
satelettronica

Note

- *The air conditioning system must be operated for at least 60 minutes to ensure that the injected leak detecting additive is distributed throughout the entire refrigerant circuit (air conditioner compressor must run). The leak may become visible after a short period, but this depends on the size of the leak.*
- *In the event of leaks at the evaporator, the additive may be washed out with the condensate and emerge via the condensate drain. As the evaporator is not accessible on the majority of models without a great amount of pre-preparation, a check of the condensed water drain point can indicate a leaking evaporator. The additive must have been in the refrigerant circuit for a long time to make this possible.*
- *The protective goggles are not only designed to provide eye protection. They also make the additive more readily visible under UV light.*
- *Independent of the accessibility to the various components of the refrigerant circuit, it may become necessary to remove certain components from the vehicle (e.g. bumper or air filter).*

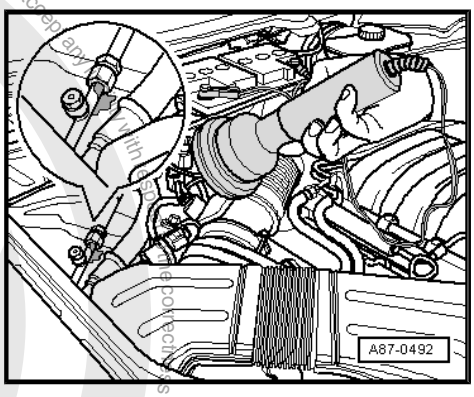

– Move vehicle to a poorly lit area of the workshop (daylight or bright artificial lighting diminishes the effect of the UV light).
– Check the accessibility to the various components of the refrigerant circuit and remove components in the vicinity of the refrigerant circuit that obstruct the view of the respective circuit components (e.g. sound insulation and bumper).
– Protect eyes with protective glasses.
– Connect UV lamp to a 12 V battery (vehicle battery). Take care to ensure correct polarity.
– Switch on UV lamp and illuminate components of refrigerant circuit. Positions at which refrigerant - along with refrigerant oil and leak detection additive - can leak out fluoresce (light-up) under UV light.

Note

- *The leak detection additive can be allowed to remain in the refrigerant circuit.*
- *Using cleaning solution - VAS 6201/3- , clean the engine compartment and, if necessary, the components of the refrigerant circuit, to remove leak detection additive residue left from the repair work.*

Protected by copyright. Copying for private or commercial purposes, in part or in whole, is not permitted unless authorised by Volkswagen AG. Volkswagen AG does not guarantee or accept any liability with respect to the correctness of information in this document. Copyright by Volkswagen AG.

satelettronica

Protected by copyright. Copying for private or commercial purposes, in part or in whole, is not permitted unless authorised by Volkswagen AG. Volkswagen AG does not guarantee or accept any liability with respect to the correctness of information in this document. Copyright by Volkswagen AG.

10 Clearing refrigerant circuit of contaminants

⇒ “10.1 Vehicles with high-voltage system (hybrid vehicles)”, page 67

⇒ “10.2 Blowing through refrigerant circuit with compressed air and nitrogen”, page 68

⇒ “10.3 Flushing refrigerant circuit with refrigerant R134a”, page 70

10.1 Vehicles with high-voltage system (hybrid vehicles)

Danger to life from high voltage

The high-voltage system is under high voltage. Damage to high-voltage components can result in severe or fatal injury from electric shock.

– Perform visual check of high-voltage components and high-voltage cables.

– Never use cutting or forming tools, or any other sharp-edged tools.

– Never use heat sources such as welding, brazing, soldering, hot air or thermal bonding equipment.

If repair work in the vicinity of high-voltage components and cables is necessary, carry out a visual check for damage on high-voltage components and cables ⇒ Electrical system; Rep. gr. 93 ; General warning instructions for work on the high-voltage system .

If repair work on high-voltage components is necessary, de-energise the high-voltage system ⇒ Electrical system; Rep. gr. 93 ; De-energising high-voltage system , and “observe the general warning instructions for work on the high-voltage system” ⇒ Electrical system; Rep. gr. 93 ; General warning instructions for work on the high-voltage system .

Note

- *Volkswagen rejects the use of chemical substances for purposes of sealing leaks in refrigerant circuits.*
- *Chemical substances used for sealing leaks in refrigerant circuits often react with the surrounding air and the humidity contained within. They cause deposits to build up in the refrigerant circuit (and your air conditioner service station), valves to malfunction and defects in other components with which they come into contact. These deposits cannot be completely removed from the components (not even by flushing). The refrigerant circuit can only be repaired by replacing all components that have come into contact with this substance.*
- *It is often not possible to detect from the outside whether chemical substances have been used to seal leaks in the refrigerant circuit. The adhesive label that serves to identify its use can usually not be found. Therefore, exercise caution on vehicles for which you have no service or repair record.*

- In order to remove dirt (e.g. abraded matter from a defective air-conditioning compressor) as well as old refrigerant oil as

satelettronica

cleanly as possible and with as little work as possible, rinse the refrigerant circuit with R134a refrigerant.

On vehicles with electrical air conditioner compressor, observe the notes on renewing the electrical air conditioner compressor -V470-. If the electronics of the air conditioner compressor are damaged, the refrigerant circuit must not always be cleaned ⇒ page 194 .

10.2 Blowing through refrigerant circuit with compressed air and nitrogen

- Use compressed air to force moisture and other contaminants out of the refrigerant circuit and use nitrogen to force moisture out of the refrigerant circuit.
- The method of blowing through the refrigerant circuit with compressed air and nitrogen often requires a lot more work than purging with refrigerant R134a. When purging with refrigerant R134a, cleaning of the components is considerably better. It is therefore always best to purge the system in the event of complaints (the method of blowing through should only be selected for certain complaints and for individual components).

Only individual components are to be blown through if:

- ♦ There is no way of purging the refrigerant circuit with refrigerant R134a.
- ♦ If there is dirt or contamination in individual components of the refrigerant circuit.
- ♦ If during evacuation of a leak-tight refrigerant circuit the vacuum display is not constant on gauge (moisture in the refrigerant circuit, which generates vapour pressure).
- ♦ If the refrigerant circuit has been left open for longer than normally required for repairs (e.g. following an accident).
- ♦ Pressure and temperature measurements in the circuit indicate that there is moisture in the refrigerant circuit.
- ♦ The vehicle-specific repair manual ⇒ Heating, air conditioning deems it necessary after replacement of certain components.

Note

- ♦ *Blowing through the refrigerant circuit with compressed air and nitrogen will not achieve the same degree of cleanliness as purging with refrigerant R134a. When purging with refrigerant R134a, the refrigerant oil is shifted and cleaning of the components is better* *⇒ page 70* *.*
- ♦ *When blowing through, a maximum working pressure of 15 bar must not be exceeded (if necessary, use pressure limiter for compressed air as well).*

CAUTION

Risk of injury from nitrogen escaping under high pressure.

– Use pressure limiter for nitrogen tank.

– Always flush components in direction opposite to refrigerant flow.

Compressed air and nitrogen cannot be blown through the restrictor, expansion valve, air conditioner compressor, receiver or reservoir.

Volkswagen AG does not guarantee or accept any liability with respect to the correctness of information in this document. Copyright by Volkswagen AG.
Licensed by Volkswagen Group Italia S.p.A. Not to be republished in any form without prior written consent.
satelettronica

– In cases where condensers have a drying agent cartridge in the integrated receiver, this drying agent cartridge must be removed.

– First blow out soiling using compressed air and then dry components with nitrogen.

– Fit adapter for connection of pressure hose to refrigerant circuit ⇒ page 87 and ⇒ Heating, air conditioning .

To prevent oil and moisture from the compressed air system making its way into the refrigerant circuit, the following points must be observed.

- The compressed air must be fed through a compressed air cleaning unit to clean and dry it. Therefore, use compressed air filter and dryer (included in items supplied with tools for painting work) ⇒ Workshop equipment and Special tools catalogue .
- If refrigerant pipes have threads or union nuts at connections, use adapter - V.A.G 1785/1- to adapter - V.A.G 1785/8- to connect to 5/8" - 18 UNF charging hose. These adapters can be found in the adapter case for VW/Audi passenger vehicle set - VAS 6338/1- and adapter case for commercial vehicle set - VAS 6338/50- .
- On refrigerant pipes with no thread or union nut on the connection, use adapter from adapter case for VW/Audi passenger vehicle set - VAS 6338/1- or adapter case for commercial vehicle set - VAS 6338/50- or commercially available air blow gun with rubber nozzle.

Note

- *Always extract any escaping air and/or nitrogen from the components using appropriate local exhaust ventilation LEV (e.g. workshop extraction system).*
- *Certain contaminants and old refrigerant oil cannot be shifted from the refrigerant circuit at all with compressed air or if the compressed air is insufficient. These contaminants can only be removed by purging with refrigerant R134a* ⇒ page 70 .

Protected by copyright. Copyright by Volkswagen AG. Volkswagen does not guarantee or accept any liability with respect to the correctness of information in this document. Copyright by Volkswagen AG. Unauthorised use, in part or in whole, is prohibited. Copyright by Volkswagen AG.
satelettronica

Protected by copyright. Copying for private or commercial purposes, in part or in whole, is not permitted unless authorised by Volkswagen AG. Volkswagen AG does not guarantee or accept any liability with respect to the correctness of information in this document. Copyright by Volkswagen AG.

10.2.1 Flushing refrigerant circuit

Note

- *On vehicles where no adapters fit the refrigerant pipes, blow through individual components using, for example, an air blow gun with rubber nozzle. When doing this, be particularly careful not to damage the connections (do not crush or scratch them).*
- *The evaporator should be blown through from the connection to the low pressure side (large diameter), with the expansion valve or restrictor removed.*
- *Always flush components in direction opposite to refrigerant flow.*
- *Examine the expansion valve; renew if dirty or corroded.*
- *Replace any components on which dark, sticky deposits cannot be removed with compressed air.*
- *Thin, light grey deposits on the insides of refrigerant pipes do not impair the function of the components.*
- *After blowing out the system, always renew the receiver or reservoir and the restrictor. If the condenser has a dryer, renew the dryer cartridge or dryer.*

10.3 Flushing refrigerant circuit with refrigerant R134a

⇒ “10.3.1 Principle circuit diagrams for various purging circuits”, page 78

⇒ “10.3.2 Purging electrical air conditioner compressor”, page 83

⇒ “10.3.3 Adapters for setting up flushing circuits”, page 87

The refrigerant circuit must be flushed with refrigerant R134a if

- Dirt or other contaminants are in the refrigerant circuit.
- If during evacuation of a leak-tight refrigerant circuit the vacuum display is not constant on gauge (moisture in the refrigerant circuit, which generates vapour pressure).
- If the refrigerant circuit has been left open for longer than normally required for repairs (e.g. following an accident).
- Pressure and temperature measurements in the refrigerant circuit indicate that there is moisture in the refrigerant circuit.
- There is doubt about the amount of refrigerant oil in the refrigerant circuit. If the air conditioner compressor is to be reinstalled, drain refrigerant oil out of air conditioner compressor via the block connections. To facilitate this process, turn the air conditioner compressor over by hand at the poly V-belt pulley or coupling disc of the magnetic coupling. After purging, fill refrigerant circuit with total amount of refrigerant oil (50 g direct into air conditioner compressor) according to ⇒ vehicle-specific workshop manual . Take account of oil volume for 2nd evaporator system.
- The air conditioner compressor has to be exchanged because of internal damage (e.g. noisy or lack of power).
- If it is required by the workshop manual for the specific vehicle following the renewal of certain components.

sateletronica

- a different air conditioner compressor with other refrigerant oil is to be fitted.

Tools required

- Air conditioner service station with purging device or air conditioner service station with purging device - VAS 6337- . These air conditioner service stations feature an additional function for “purging the refrigerant circuit with R134a” and the purging device for refrigerant circuits necessary for this procedure ⇒ Workshop equipment and special tools catalogue .
- Adapter case VW/Audi passenger vehicle set - VAS 6338/1- ⇒ page 87 and ⇒ Workshop equipment and special tools catalogue .
- Adapter case commercial vehicle set - VAS 6338/50- ⇒ page 87 and ⇒ Workshop equipment and special tools catalogue .

Note

- *If you do not have either of the two air conditioner service stations indicated above, you can also rinse the refrigerant circuit with the air conditioner service station you do have if the station is of the right type (at least 7 kg of R134a refrigerant in the refrigerant bottle) by using the flushing device for refrigerant circuits - VAS 6336/1- or flushing device for refrigerant circuits - VAS 6337/1- . The purging process must then be carried out manually* *⇒ page 76* *.*
- *On vehicles with threaded connections on the refrigerant circuit, adapter - V.A.G 1785/1- to adapter - V.A.G 1785/8- from adapter case VW/Audi passenger vehicle set - VAS 6338/1- or adapter case commercial vehicle set - VAS 6338/50- can be used. On vehicles with threaded connections on the air conditioner compressor and on the reservoir, the adapter - V.A.G 1785/8- is required two-fold.*
- *In the adapter case there is also a charging hose - VAS 6338/31- with 5/8 - 18 UNF connections and large internal diameter to bridge components (commercially available type).*

Preparations

– Drain refrigerant circuit ⇒ page 53 .

– Remove air conditioner compressor ⇒ Heating, air conditioning .

On vehicles with restrictor and reservoir.

– Remove restrictor (vehicle-specific) and join the refrigerant lines together again ⇒ Heating, air conditioning .

– Remove reservoir (vehicle-specific) ⇒ Heating, air conditioning and join refrigerant pipes together again (to do this, use adapter and charging hose - VAS 6338/31- from adapter case VW/Audi passenger vehicle set - VAS 6338/1-) ⇒ page 87 .

Note

The collector could be purged but due to its large inner volume it would require too much refrigerant. During extraction, the refrigerant ices up the reservoir heavily and the extraction procedure takes much longer as a result.

Protected by copyright. Copyright by Volkswagen AG. Copyright by Volkswagen AG does not guarantee or accept any liability with respect to the correctness of information in this document.
satelettronica

On vehicles with expansion valve and receiver

– Remove the receiver ⇒ Heating, air conditioning (vehicle-specific, not necessary on all vehicles) and join the refrigerant lines together (use the adapter and the charging hose - VAS 6338/31- to do this) ⇒ page 87 .

– Remove the expansion valve ⇒ Heating, air conditioning (vehicle-specific) and insert an adapter in its place ⇒ page 87 .

Note

If there is not a suitable adapter for the expansion valve in the adapter case VW/Audi passenger vehicle set - VAS 6338/1- or adapter case commercial vehicle set - VAS 6338/50- , the removed expansion valve can also be drilled out (the old expansion valve must be subsequently renewed).

Note

- *Disregard item -3-.*
- *When drilling out, ensure that the flow holes -2- and -4- in the expansion valve -1- are located offset to each other.*
- *Failure to observe this measure can result in the sealing surface on the expansion valve -1- becoming damaged when drilling, thereby rendering the expansion valve useless for setting up the flushing circuit.*

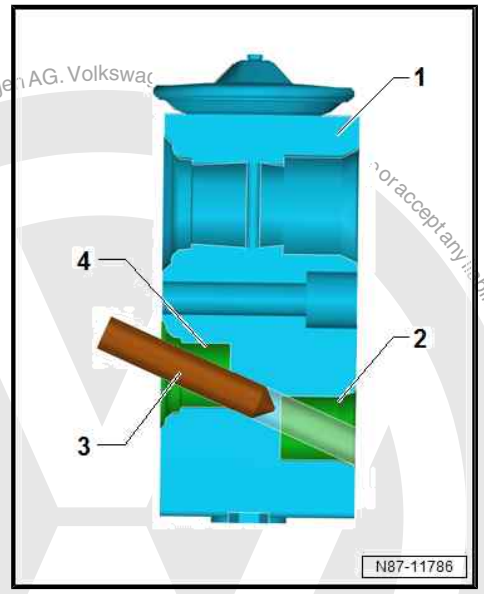

Protected by copyright. Copyright for private or commercial purposes, in part or in whole, is not permitted unless authorised by Volkswagen AG. Volkswagen AG does not give any guarantee or accept any liability with respect to the correctness of information in this document. Copyright by Volkswagen AG.
satelettronica

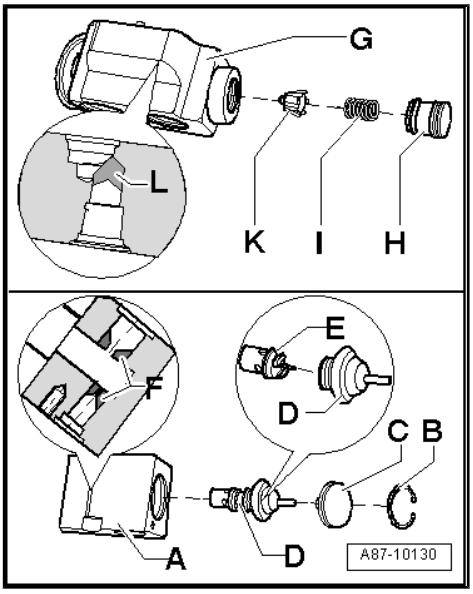

Note

- *Before drilling out, some parts have to be removed from the expansion valve.*
- *There are two types of expansion valve. For type -A-, parts -B-, -C- and -D- must be removed. Now separate part -E- from control element -D-. Then drill out the expansion valve in area -F- using a suitably sized drill bit (6 mm in diameter).*
- *On version -G-, parts -H-, -I- and -K- must be removed and then area -L- drilled out with a suitably sized drill bit (6 mm in diameter).*
- *Clean away any swarf from the drilled out expansion valve.*
- *Reinstall parts -B-, -C- and -D- on type -A- or part -H- on type -G-.*

Note

On vehicles with two evaporators, the circuit to the second evaporator must be isolated from the circuit to the first evaporator and purged in a separate procedure ⇒ Heating, air conditioning and *⇒ page 87* *.*

Drill open shut-off valve.

Protected by copyright. Copying for private or commercial purposes, in part or in whole, is not permitted unless authorised by Volkswagen AG. Volkswagen AG does not guarantee or accept any liability with respect to the correctness of information in this document. Copyright by Volkswagen AG.

satelettronica

Note

- *Two shut-off valves are required for purging the refrigerant circuit. A shut-off valve must be drilled open, if no shut-off tap - VAS 6338/42- is available, for example.*
- *Remove the solenoid -A- and the solenoid valve -B- before drilling open the shut-off valve.*
- *Drill open the shut-off valve -C- using a suitable drill bit (e.g. 5 mm in diameter).*
- *Remove any metal shavings resulting from drilling hole -D- from shut-off valve -C-.*
- *Reinstall the solenoid valve -B- with the respective seal -E- to the shut-off valve -C- which has been drilled open.*

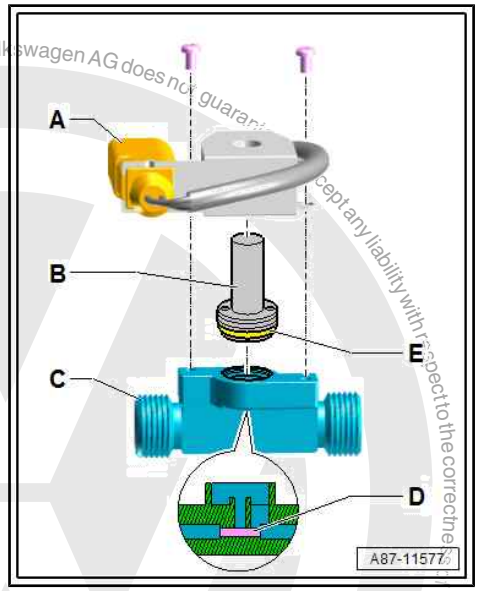

Flush

– Check the refrigerant volume in the air conditioning bottle. There must be at least 7 kg of R134a refrigerant.

Note

If necessary, switch on the heater fitted to your refrigerant bottle for 30 minutes before you start rinsing. In this way, pressure in the refrigerant bottle is increased and charging of the purging circuit is accelerated.

– Drain the waste oil container of the air conditioner service station .

– Connect the supply hose (high-pressure side) of the air conditioner service station with an adapter ⇒ page 87 to the low-pressure line leading to the air conditioner compressor (line with larger diameter).

– Connect the return hose (low-pressure or suction side) of the air conditioner service station to the outlet of the purging device for refrigerant circuits.

– Connect the inlet of the purging device for refrigerant circuits with an adapter ⇒ page 87 to the high-pressure line leading to the air conditioner compressor (line with smaller diameter).

Protected by copyright. Copyright by Volkswagen AG.
Copyright by Volkswagen AG. Volkswagen AG does not guarantee or accept any liability with respect to the correctness of information in this document.
Protected by copyright. Copyright by Volkswagen AG. Volkswagen AG does not guarantee or accept any liability with respect to the correctness of information in this document.
satelettronica

Note

- *The components must always be purged against the direction of refrigerant flow when the air conditioning system is in operation (not applicable for electrical air conditioner compressor)* *⇒ page 78* .
- *When flushing, contaminants from the refrigerant circuit enter the flushing device for refrigerant circuits and the air conditioner service station and are retained in the filters and dryers installed within. Depending on the impurity, these components are to be replaced at shorter intervals in accordance with the operating instructions for the air conditioner service station or the rinsing device for refrigerant circuits.*
- *The filter in the rinsing device for refrigerant circuits is to be replaced after 2 rinsing cycles at the latest (rinsed vehicle), depending on the type and degree of contamination of the rinsed refrigerant circuit. If a heavily contaminated refrigerant circuit is purged (the refrigerant oil from the refrigerant circuit is black and viscous or there are large amounts of shavings in the refrigerant circuit) renew filter after purging refrigerant circuit. After such heavy contamination of the refrigerant circuit, we suggest purging the system again after changing the filter.*
- *Depending on the type of contamination, deposits (old refrigerant oil and friction dust from the air conditioner compressor) will gather in the sight glass of the rinsing device for refrigerant circuits. Clean the sight glass(es) after purging and purge the refrigerant circuit once more as a precautionary measure after purging.*
- *Fluid refrigerant cannot flow at the necessary speed through the expansion valve, the restrictor and the desiccant cartridge of certain receivers. These components must therefore be removed and an adapter installed in their place ⇒ Heating, air conditioning .*
- *Adapter for connecting the air conditioning service station and for bridging certain components in the refrigerant circuit* *⇒ page 87* .

– Switch on the air conditioner service station and flush the refrigerant circuit (duration approx. 1 to 1.5 hours for one flushing cycle with three flushes using approx. 4 kg of refrigerant R134a for each flush).

AG. Volkswagen AG does not guarantee or accept any liability with respect to the correctness of information in this document. Copyright by Volkswagen AG.
Copyright. Copyright. Private use only. Unauthorized use prohibited. Without prior consent of Volkswagen AG. No access authorized to SVK.
satelettronica

Note

- *Rinsing of a refrigerant circuit is to be carried out in accordance with the operating instructions for the air conditioning service station .*
- *The container for old oil holds only approx. 125 cm^3 of refrigerant oil, depending on the type of air conditioning service station . If a system with a greater amount of refrigerant oil has to be purged, it may be necessary to empty the waste oil container after the first purge of the purging cycle.*
- *Watch the refrigerant that flows out of the refrigerant circuit. When the refrigerant flows through the sight glass of the purging device into the air conditioner service station clear and completely free of colour, the refrigerant circuit is cleaned.*
- *When purging, the whole amount of refrigerant oil from the refrigerant circuit is cleaned (except for a small amount in the evaporator, though this is not important).*
- *Where contamination is particularly high, it may be necessary to carry out the flushing cycle twice (two flushing cycles with three flushes each). Purging device filter must be renewed before starting second purging cycle.*

Sequence of steps in a rinsing run (which is determined automatically by the program of the air conditioning service station)

- After switching on, the purging cycle (refrigerant circuit with connection hoses and purging device for refrigerant circuits) is first evacuated and the refrigerant circuit thereby checked for leaks. It may be necessary to start the next steps manually, depending on the type of air conditioning service station .
- A predetermined amount of refrigerant (e.g. 4 kg) is pumped into the evacuated rinsing circuit via the high-pressure side of the air conditioning service station (opposite to the direction of flow that is normal during operation of the air-conditioning system and, therefore, at the low-pressure end of the vehicle's refrigerant circuit). Depending on the type of air conditioning service station , refrigerant is pumped in until the rinsing circuit has been completely filled with liquid refrigerant. This is indicated by the fact that refrigerant stops flowing into the circuit for a certain amount of time, for example.
- After the specified amount of refrigerant has been pumped in, the heater of the rinsing device for refrigerant circuits is switched on, for example, depending on the type of air conditioning service station and rinsing device for refrigerant circuits (only if the refrigerant is extracted from the rinsing device for refrigerant circuits in gaseous form).
- Once the refrigerant has been extracted, the heater (if there is one) of the rinsing device for refrigerant circuits is switched off (it is possible that the refrigerant circuit will then be briefly evacuated again, depending on the type of equipment). After evacuation, the refrigerant oil extracted from the refrigerant circuit is separated by the air conditioning service station .
- The sequence for filling with refrigerant, extracting (and evacuating) is carried out twice (that means a total of three times).
- After the third extraction, the rinsing circuit is evacuated, depending on the type of air conditioning service station .

Protected by copyright. Copyright by Volkswagen AG. Volkswagen AG does not guarantee or accept any liability with respect to the correctness of information in this document. Copyright by Volkswagen AG.
satelettronica

– After a rinsing cycle, check the sight glass(es) of the rinsing device for refrigerant circuits and, if they are dirty, clean them in accordance with the operating instructions for the rinsing device for refrigerant circuits or the air conditioning service station . Carry out a purging cycle once more as a precautionary measure. One flushing sequence is sufficient (approx. 30 min.)

– Check the pressure in the refrigerant circuit. There must be no pressure in the refrigerant circuit (evacuate again briefly if necessary).

– Remove the connections to the air conditioning service station from the refrigerant circuit of the vehicle. There must be no overpressure in the refrigerant circuit.

– Renew these components according to the type of vehicle.

♦ Restrictor and reservoir

♦ Expansion valve and liquid container or desiccant cartridge in the liquid container

– ⇒ Heating, air conditioning and ⇒ Parts catalogue .

– Replace air conditioner compressor depending on complaint ⇒ Heating, air conditioning and ⇒ Parts catalogue or drain the remaining refrigerant oil from the removed air conditioner compressor ⇒ page 191 (renewing components of refrigerant circuit) and fill it with the prescribed amount of fresh refrigerant oil ⇒ vehicle-specific workshop manual .

Note

♦ *There is a predetermined amount of refrigerant oil in the genuine air conditioner compressor. On vehicles with two evaporators, a certain amount of refrigerant oil may have to be added to the circuit as appropriate ⇒ vehicle-specific workshop manual .*

♦ *If the air conditioner compressor does not have to be renewed, the volume of refrigerant oil in the air conditioner compressor must be replenished in accordance with the fill volume (pour out refrigerant oil and refill the prescribed amount in the air conditioner compressor or the refrigerant circuit) ⇒ page 191 (renewing components of refrigerant circuit) and ⇒ vehicle-specific workshop manual .*

– Assemble the refrigerant circuit back together again completely ⇒ Heating, air conditioning .

– Evacuate and fill the refrigerant circuit as per specifications ⇒ page 53 and ⇒ page 54 .

– Bring the air conditioning system into operation as per specifications ⇒ Heating, air conditioning and ⇒ page 55 .

Protected by copyright. Copyright by Volkswagen AG.
Copyrighted by Volkswagen AG. Copyright by Volkswagen AG. Commercial purposes, in part or in whole, is not permitted unless authorized. Volkswagen AG does not guarantee or accept any liability with respect to the correctness of information in this document.
satelettronica

10.3.1 Principle circuit diagrams for various purging circuits

Copying for private or commercial purposes, in whole or in part, is not permitted unless authorised by Volkswagen AG. Volkswagen AG does not guarantee or accept any liability with respect to the correctness of information in this document. Copyright by Volkswagen AG.

Note

- *The arrows in the following illustrations show the direction of flow of the refrigerant during purging. The refrigerant flows against the direction of flow during normal conditioning of the air, which is why the high-pressure system of the air conditioning service station is connected to the low-pressure connection of the refrigerant circuit to the air conditioner compressor.*
- *These principle circuit diagrams show a refrigerant circuit with restrictor and reservoir and a refrigerant circuit with expansion valve, receiver and a second evaporator (extra equipment on certain vehicles).*
- *Depending on the design of the air conditioning service station , non-return valves may be installed between the refrigerant circuit and the air conditioning service station . This ensures the correct direction of flow of refrigerant during purging.*

Refrigerant circuit with restrictor and reservoir

Note

On vehicles with restrictor and reservoir, the restrictor and the reservoir are removed. The refrigerant pipes of the restrictor are assembled again. The refrigerant pipes to the removed reservoir are joined together with two adapters and the charging hose - VAS 6338/31- (from adapter case VW/Audi passenger vehicle set - VAS 6338/1- .

satelettronica

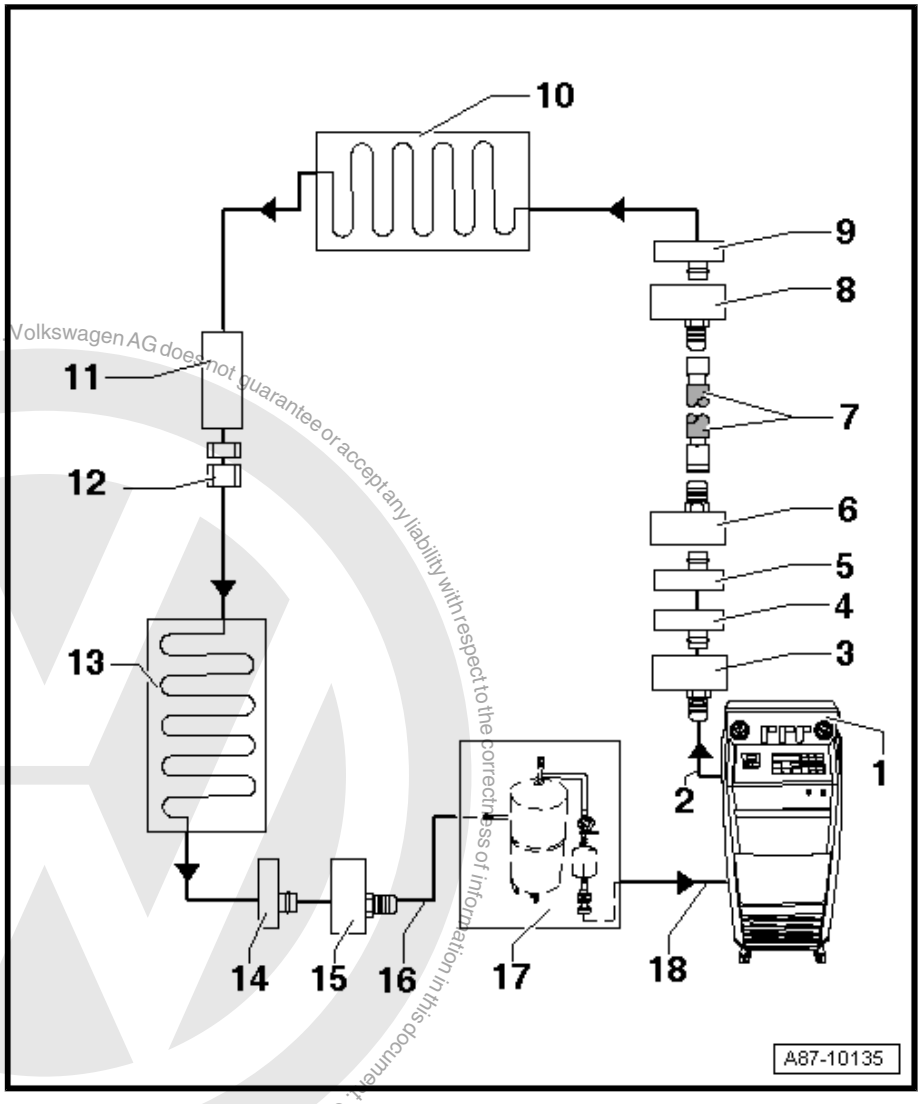

1 - Air conditioner service station

- ❑ with an electronic control and a flushing programme, e.g. air conditioner service station with flushing device - VAS 6337-
- ❑ If an air conditioner service station without flushing program is used, the sequence has to be carried out manually (evacuate, flush 3 times with at least 4 kg of refrigerant each time and extract refrigerant again, evacuate).

2 - Refrigerant hose of air conditioner service station

- ❑ From high pressure side of air conditioning service station (normally coloured red) to connection for low pressure side of air conditioner compressor on refrigerant circuit (larger diameter)

3 - Adapter for connection to low pressure side in refrigerant circuit

- ❑ Different versions depending on vehicle ⇒ page 87 .
- ❑ From adapter case VW/Audi passenger vehicle set - VAS 6338/1- .

4 - Connection of low pressure side in refrigerant circuit

- ❑ Different versions depending on vehicle ⇒ page 87 .
- ❑ On refrigerant line from air conditioner compressor to reservoir.

5 - Connection to reservoir

- ❑ Different versions depending on vehicle ⇒ page 87 .
- ❑ On refrigerant line from air conditioner compressor to reservoir.

6 - Adapter for bridging removed reservoir

- ❑ Different versions depending on vehicle ⇒ page 87 .
- ❑ From adapter case VW/Audi passenger vehicle set - VAS 6338/1- .

7 - Charging hose for refrigerant ⇒ page 87

- ❑ For example charging hose - VAS 6338/31- (from adapter case VW/Audi passenger vehicle set - VAS 6338/1-).

8 - Adapter for bridging removed reservoir

- ❑ Different versions depending on vehicle ⇒ page 87 .
- ❑ From adapter case VW/Audi passenger vehicle set - VAS 6338/1- .

9 - Connection to reservoir

- ❑ Different versions depending on vehicle ⇒ page 87 .

Volkswagen AG does not guarantee or accept any liability with respect to the correctness of information in this document. Copyright by Volkswagen AG.
Protected by copyright. Copying for private or commercial purposes, in part or in whole, is not permitted unless authorised by Volkswagen AG.
satelettronica

10 - Evaporator

11 - Location of restrictor

- ❑ The restrictor is removed.
- ❑ Removing restrictor ⇒ Heating, air conditioning .

12 - Threaded connection in refrigerant line

- ❑ After removing the restrictor, screw back together again ⇒ Heating, air conditioning .

13 - Condenser

14 - Connection for high pressure side on refrigerant circuit

- ❑ Different versions depending on vehicle ⇒ page 87 .

15 - Adapter for connection of high pressure side in refrigerant circuit

- ❑ Different versions depending on vehicle ⇒ page 87 .
- ❑ From adapter case VW/Audi passenger vehicle set - VAS 6338/1- .

16 - Charging hose of flushing device for refrigerant circuits

- ❑ From connection to high-pressure side of air conditioner compressor on refrigerant circuit (smaller diameter) to inlet of purging device for refrigerant circuits - VAS 6336/1- or purging device for refrigerant circuits - VAS 6337/1- .

17 - Flushing device for refrigerant circuits

- ❑ Different versions and different design e.g. purging device for refrigerant circuits - VAS 6336/1- or purging device for refrigerant circuits - VAS 6337/1- .
- ❑ With filter, sight glass, safety valve, heating, refrigerant tank, etc. (depending on version).

Note

Depending on the layout of the air conditioner service station and the flushing device for refrigerant circuits, there may be a service coupling for refrigerant circuits fitted at the outlet and in some cases at the inlet of the flushing device. If a service connection with a valve is installed to the outlet of the flushing device, this valve must be opened completely when the service coupling is connected. If the valve is not opened completely, it restricts the refrigerant flow.

– If there is a connection for a service coupling fitted at the inlet of the flushing device, the inlet must be adapted to allow for the refrigerant hose coming from the vehicle to be connected directly.

Note

A service coupling and a valve in the inlet of the flushing device restrict the refrigerant flow from the vehicle into the flushing device.

18 - Refrigerant hose of air conditioner service station

- ❑ From the low pressure side of the air conditioner service station (normally coloured blue) to the outlet of the flushing device for refrigerant circuits.

Copyright by Volkswagen AG. Volkswagen AG does not guarantee or accept any liability with respect to the correctness of information in this document. Copyright by Volkswagen AG. Reproduction, distribution, disclosure to third parties or processing of this document or parts thereof is not permitted unless authorised by Volkswagen AG.
satelettronica

Refrigerant circuit with expansion valve, receiver and second evaporator

Note

- *This principle circuit diagram shows a refrigerant circuit with expansion valve, receiver and a second evaporator (extra equipment on certain vehicles).*
- *On vehicles with expansion valve and receiver, the expansion valve is removed and an adapter installed in its place. The receiver must be purged, depending on the vehicle or the dryer cartridge removed. Depending on the type of receiver, this should be removed and the line connections to the receiver joined together using two adapters and a charging hose.*
- *On vehicles with just one evaporator, the components from position "16" are not installed or not required.*

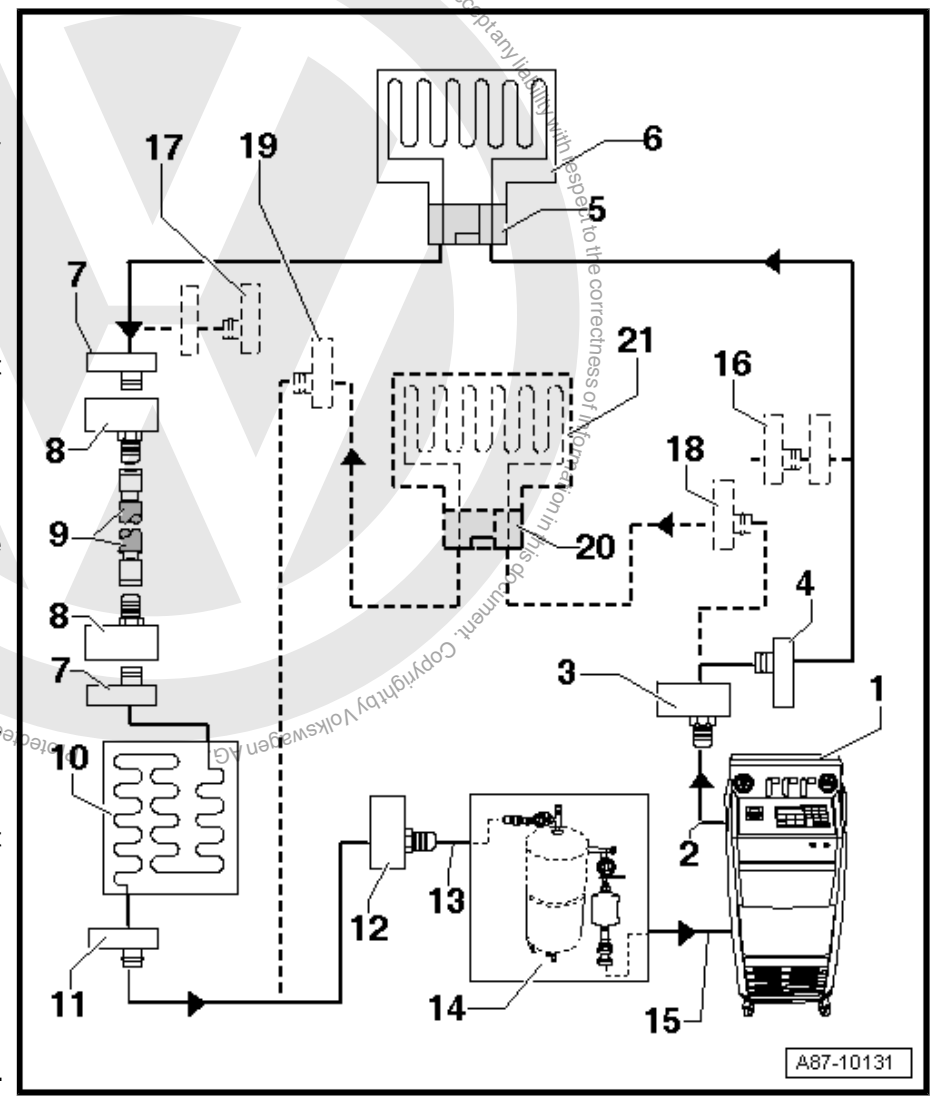

1 - Air conditioner service station

- ❑ with an electronic control and a flushing programme, e.g. air conditioner service station with flushing device - VAS 6337-
- ❑ If an air conditioning service station is used which does not have a purging programme, then the sequence must be performed manually.
  - Extract refrigerant, if there is any in the system.
  - Connect flushing device for refrigerant circuits - VAS 6337/1- between air conditioner service station and return line for refrigerant circuit.
  - Evacuate refrigerant circuit for 20 minutes, then fill system with 4 kg of refrigerant R134a. Then extract again and repeat process two further times. If after the 3rd purging process the refrigerant in the sight glass/glasses is not clear, repeat process again.

2 - Refrigerant hose of air conditioner service station

- ❑ From high pressure side of air conditioning service station (normally coloured red) to connection for low pressure side of air conditioner compressor on refrigerant circuit (larger diameter)

3 - Adapter for connection to low pressure side in refrigerant circuit

- ❑ Different versions depending on vehicle ⇒ page 87 .
- ❑ From adapter case VW/Audi passenger vehicle set - VAS 6338/1- .

satelettronica

4 - Connection of low pressure side in refrigerant circuit

- ❑ Different versions depending on vehicle ⇒ page 87 .

5 - Adapter for removed expansion valve

- ❑ Different versions depending on vehicle ⇒ page 87 .
- ❑ From adapter case VW/Audi passenger vehicle set - VAS 6338/1- .

6 - Evaporator

7 - Connection to receiver

- ❑ Different versions depending on vehicle ⇒ page 87 .
- ❑ Not included on vehicles with a dryer cartridge in the receiver on the condenser or one in the receiver integrated within the condenser ⇒ Heating, air conditioning .

8 - Adapter for bridging removed receiver

- ❑ Not required on all vehicles.
- ❑ Different versions depending on vehicle ⇒ page 87 .
- ❑ From adapter case VW/Audi passenger vehicle set - VAS 6338/1- .

9 - Charging hose for refrigerant ⇒ page 87

- ❑ For example charging hose - VAS 6338/31- (from adapter case VW/Audi passenger vehicle set - VAS 6338/1-).

10 - Condenser

- ❑ If there is a receiver with dryer cartridge installed on the condenser, the dryer cartridge must be removed (seal receiver again on or in condenser following removal) ⇒ Heating, air conditioning .
- ❑ If the receiver is attached directly to the condenser, remove the receiver after purging and renew ⇒ Heating, air conditioning .

11 - Connection for high pressure side on refrigerant circuit

- ❑ Different versions depending on vehicle ⇒ page 87 .

12 - Adapter for connection of high pressure side in refrigerant circuit

- ❑ Different versions depending on vehicle ⇒ page 87 .
- ❑ From adapter case VW/Audi passenger vehicle set - VAS 6338/1- .

13 - Charging hose of flushing device for refrigerant circuits

- ❑ From connection to high pressure side of air conditioner compressor on refrigerant circuit (smaller diameter) to inlet of flushing device for refrigerant circuits.

14 - Flushing device for refrigerant circuits

- ❑ Different versions and different design, e.g. flushing device for refrigerant circuits - VAS 6337/1- .
- ❑ With filter, sight glass, safety valve, heating, refrigerant tank, etc. (depending on version).

Note

Depending on the layout of the air conditioner service station and the flushing device for refrigerant circuits, there may be a service coupling for refrigerant circuits fitted at the outlet and in some cases at the inlet of the flushing device. If a service connection with a valve is installed to the outlet of the flushing device, this valve must be opened completely when the service coupling is connected. If the valve is not opened completely, it restricts the refrigerant flow.

– If there is a connection for a service coupling fitted at the inlet of the flushing device, the inlet must be adapted to allow for the refrigerant hose coming from the vehicle to be connected directly.

Protected by copyright. Copying for private or commercial purposes, in any form and by any means, is not permitted unless authorised by Volkswagen AG. Volkswagen AG does not guarantee or accept any liability with respect to the correctness of information in this document. Copyright by Volkswagen AG.
satelettronica

Note

A service coupling and a valve in the inlet of the flushing device restrict the refrigerant flow from the vehicle into the flushing device.

15 - Refrigerant hose of air conditioner service station

- ❑ From the low pressure side of the air conditioner service station (normally coloured blue) to the outlet of the flushing device for refrigerant circuits.

16 - Adapter to seal outlet to second evaporator

- ❑ Only fitted on certain vehicles with “second evaporator” as optional equipment.
- ❑ From adapter case commercial vehicle set - VAS 6338/50- .

17 - Adapter to seal outlet to second evaporator

- ❑ Only fitted on certain vehicles with “second evaporator” as optional equipment.
- ❑ From adapter case commercial vehicle set - VAS 6338/50- .

18 - Connection of low pressure side in refrigerant circuit to second evaporator

- ❑ Different versions depending on vehicle ⇒ page 87 .
- ❑ Only fitted on certain vehicles with “second evaporator” as optional equipment.

19 - Connection of high pressure side on refrigerant circuit to second evaporator

- ❑ Different versions depending on vehicle ⇒ page 87 .
- ❑ Only fitted on certain vehicles with “second evaporator” as optional equipment.

20 - Adapter for removed expansion valve on second evaporator

- ❑ Different versions depending on vehicle ⇒ page 87 .
- ❑ Only fitted on certain vehicles with “second evaporator” as optional equipment.
- ❑ From adapter case commercial vehicle set - VAS 6338/50- .

21 - Second evaporator

- ❑ Only fitted on certain vehicles with “second evaporator” as optional equipment.

10.3.2 Purging electrical air conditioner compressor

Vehicles with high-voltage system

Danger to life from high voltage

The high-voltage system is under high voltage. Damage to high-voltage components can result in severe or fatal injury from electric shock.

– Perform visual check of high-voltage components and high-voltage cables.

– Never use cutting or forming tools, or any other sharp-edged tools.

– Never use heat sources such as welding, brazing, soldering, hot air or thermal bonding equipment.

If repair work in the vicinity of high-voltage components and cables is necessary, carry out a visual check for damage on high-voltage components and cables ⇒ Electrical system; Rep. gr. 93 ; General warning instructions for work on the high-voltage system .

satelettronica

If repair work on high-voltage components is necessary, de-energise the high-voltage system ⇒ Electrical system; Rep. gr. 93 ; De-energising high-voltage system , and “observe the general warning instructions for work on the high-voltage system” ⇒ Electrical system; Rep. gr. 93 ; General warning instructions for work on the high-voltage system .

Note

The electrical air conditioner compressor must be purged, if you suspect that there is too much refrigerant oil in the refrigerant circuit or if contaminated refrigerant oil (contaminated with moisture) must be extracted from the air conditioner compressor. In these cases the refrigerant circuit must be purged as well in order to clean the refrigerant circuit and to re-establish the correct amount of refrigerant oil.

If an electrical air conditioner compressor is renewed without having a mechanical fault (e.g. defective printed circuit board), the amount of refrigerant oil from this electrical air conditioner compressor must be determined.

Note

- *The air conditioner compressor must be purged in order to extract the refrigerant oil which needs to be determined.*
- *Purge the air conditioner compressor in normal direction of flow (from low-pressure inlet to high-pressure outlet).*
- *In order to purge as much refrigerant oil from the air conditioner compressor as possible make sure that the high-pressure outlet of the air conditioner compressor is in the lowest position possible.*
- *If an air conditioning service station without purging programme is used, the sequence has to be carried out manually (evacuate, purge 3 times with at least 2 kg of refrigerant each time and extract refrigerant again, evacuate).*

Determined amount e.g. 50 cm³

Then, remove as much refrigerant oil from the new air conditioner compressor as is necessary to ensure that only the same amount of refrigerant oil which has been purged from the old air conditioner compressor remains in the new one (plus 10 cm ^{3}). If, for example, the new original air conditioner compressor is filled with e.g. 200 cm^3 of refrigerant oil, then remove only 140 cm^3.

– Pour old refrigerant oil out of air conditioner compressor. Handling refrigerant ⇒ Volkswagen ServiceNet; Service handbook; Environmental protection; Waste disposal; Current situation; Disposal channels; Disposal of used oils; Refrigerant oils .

Note

If the amount of refrigerant oil which can be removed from the new air conditioner compressor is not sufficient, the new air conditioner compressor must be purged. After the new air conditioner compressor has been purged, fill the amount of refrigerant oil which has been determined when purging the old air conditioner compressor.

satelettronica

1 - Air conditioner service station

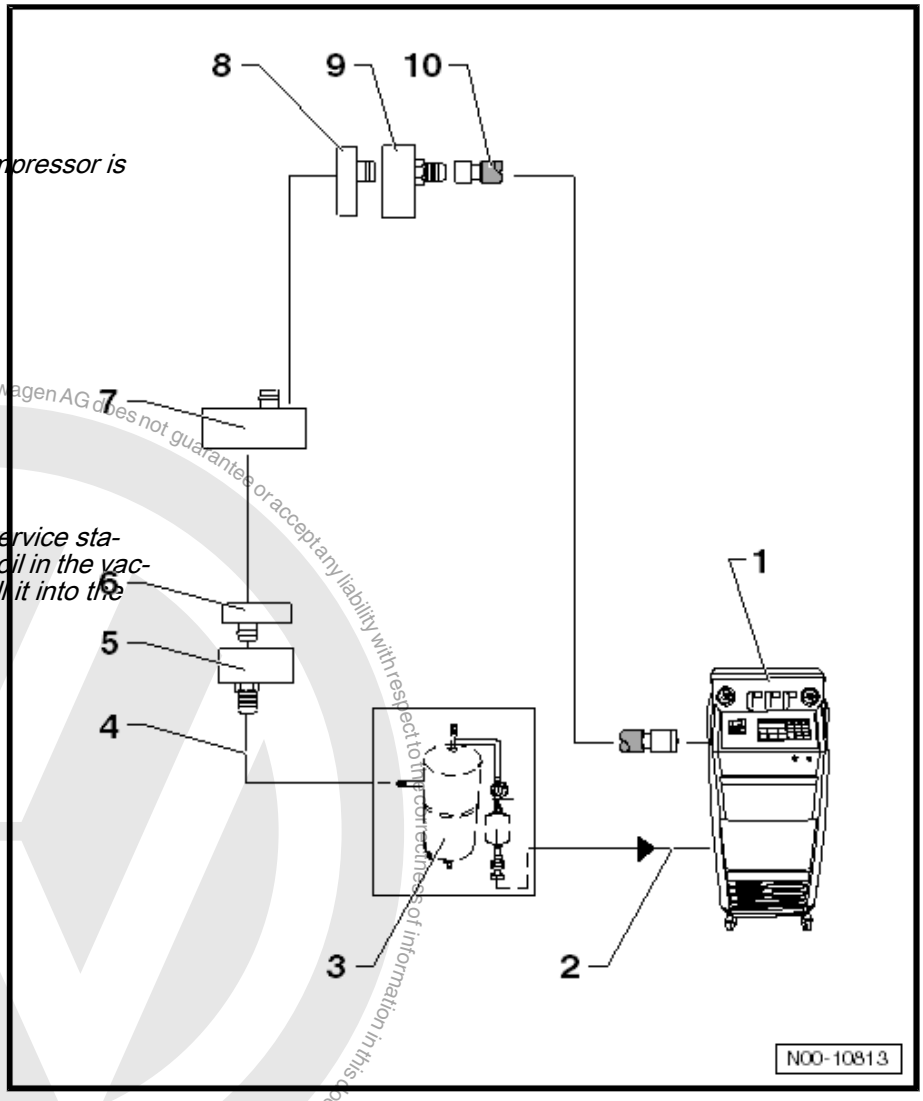

Note

The air conditioner compressor is purged manually.

– Extract refrigerant, if there is any in the system.

– Discharge the waste oil container of the air conditioner service station .

Note

Some air conditioner service stations first separate the oil in the vacuum phase and then fill it into the used-oil container.

– At the air conditioner service station , set the amount of refrigerant to 2 kg and the amount of oil to 0.

– Connect purging device for refrigerant circuits - VAS 6336/1- or purging device for refrigerant circuits - VAS 6337/1- between air conditioner service station and return line for refrigerant circuit.

– Evacuate the refrigerant circuit for 10 minutes. Then observe the vacuum gauge. If the vacuum persists, fill 2 kg of R134a refrigerant into the circuit. Then, extract and evacuate again and repeat the process.

2 - Refrigerant hose of air conditioner service station

❑ From the low pressure side of the air conditioner service station (normally coloured blue) to the outlet of the flushing device for refrigerant circuits.

3 - Flushing device for refrigerant circuits

❑ Different versions and different design e.g. purging device for refrigerant circuits - VAS 6336/1- or purging device for refrigerant circuits - VAS 6337/1- .

❑ With filter, sight glass, safety valve, heating, refrigerant tank, etc. (depending on version).

Copyright by Volkswagen AG. Volkswagen AG does not guarantee or accept any liability with respect to the correctness of information in this document. Copying for private or commercial purposes, in part or in whole, is not permitted unless authorised by Volkswagen AG.
satelettronica

Note

Depending on the layout of the air conditioner service station and the flushing device for refrigerant circuits, there may be a service coupling for refrigerant circuits fitted at the outlet and in some cases at the inlet of the flushing device. If a service connection with a valve is installed to the outlet of the flushing device, this valve must be opened completely when the service coupling is connected. If the valve is not opened completely, it restricts the refrigerant flow.

– If there is a connection for a service coupling fitted at the inlet of the flushing device, the inlet must be adapted to allow for the refrigerant hose coming from the vehicle to be connected directly.

Note

A service coupling and a valve in the inlet of the flushing device restrict the refrigerant flow from the vehicle into the flushing device.

4 - Charging hose of flushing device for refrigerant circuits

❑ From connection to high-pressure side of air conditioner compressor on refrigerant circuit (smaller diameter) to inlet of purging device for refrigerant circuits - VAS 6336/1- or purging device for refrigerant circuits - VAS 6337/1- .

5 - Adapter for connection of high pressure side in refrigerant circuit

❑ Adapter - VAS 6338/1- from adapter set for refrigerant circuits - VAS 6338/3-

Note

If the adapter - VAS 6338/40- is available, the charging hose can be connected directly to the air conditioner compressor.

6 - High-pressure side refrigerant line from air conditioner compressor

Note

Will not be used if the adapter - VAS 6338/40- is available.

– Pull the centring pin out of the refrigerant line so that the adapter - VAS 6338/3- fits properly.

7 - Electrical air conditioner compressor

❑ Purge the air conditioner compressor in normal direction of flow (from low-pressure inlet to high-pressure outlet).

❑ In order to purge as much refrigerant oil from the air conditioner compressor as possible make sure that the high-pressure outlet of the air conditioner compressor is in the lowest position possible.

8 - Low-pressure side refrigerant line to air conditioner compressor

Note

Will not be used if the adapter - VAS 6338/41- is available.

– Pull the centring pin out of the refrigerant line so that the adapter - VAS 6338/6- fits properly.

Protected by copyright. Copyright by Volkswagen AG. Volkswagen AG does not guarantee or accept any liability with respect to the correctness of information in this document. Copyright by Volkswagen AG.

satelettronica

9 - Adapter for connection to low pressure side in refrigerant circuit

❑ Adapter - VAS 6338/1- from adapter set for refrigerant circuits - VAS 6338/6-

Note

If the adapter - VAS 6338/41- is available, the charging hose can be connected directly to the air conditioner compressor.

10 - Refrigerant hose of air conditioner service station

❑ From high-pressure side of the air conditioning service station (usually coloured in red) for connection to low-pressure line or directly to air conditioner compressor using adapter - VAS 6338/41- .

10.3.3 Adapters for setting up flushing circuits

– The desiccant bag and the desiccant cartridge must always be removed before any flushing routine. Then close the receiver again.

– On condensers with a permanent dryer, this can be flushed along with the other components. A new condenser must then be installed.

Note

If a flushed refrigerant circuit is not reassembled immediately after flushing, the adapters must be left on the connections. These as well as components that are still open must be sealed with clean bungs from engine bung set - VAS 6122- .

On successful completion of flushing procedure, remove all adapters and renew following components during assembly

- Air conditioner compressor (only after renewal of air conditioner compressor due to internal damage)
- Restrictor and expansion valve
- Desiccant bag and desiccant cartridge
- Evacuating and charging valve, high-pressure side and low-pressure side
- Oil seals

Ameo 2017 ▸

Flushing adapter refrigerant lines to air conditioner compressor	Flushing adapter expansion valve
Low-pressure side ♦ Adapter - VAS 6338/12- High-pressure side ♦ Adapter - VAS 6338/3-	♦ Adapter - VAS 6338/34- or ♦ Drilled out expansion valve ⇒ page 72

Volkswagen AG. Volkswagen AG does not guarantee or accept any liability with respect to the correctness of information in this document. Copyright by Volkswagen AG. Copyright. Copying for private or commercial purposes, in part or in whole, is not permitted unless authorised by Volkswagen AG.
satelettronica

Arteon 2018 ▸

Flushing adapter refrigerant lines to air conditioner compressor	Flushing adapter expansion valve
Low-pressure side ♦ Adapter - VAS 6338/12- High-pressure side ♦ Adapter - VAS 6338/3-	♦ Adapter - VAS 6338/38- or ♦ Drilled out expansion valve ⇒ page 72

Atlas 2017 ▸

Flushing adapter refrigerant lines to air conditioner compressor	Flushing adapter expansion valve	Sealing adapter and flushing adapter for vehicles with second evaporator
Low-pressure side ♦ Adapter - VAS 6338/12- High-pressure side ♦ Adapter - VAS 6338/3-	♦ Adapter - VAS 6338/38- or ♦ Drilled out expansion valve ⇒ page 72 Rear refrigerant circuit ♦ Drilled out expansion valve ⇒ page 72	Low-pressure side of front refrigerant circuit ♦ Sealing adapter - VAS 6338/63- High-pressure side of front refrigerant circuit ♦ Sealing adapter - VAS 6338/5- Low-pressure side to second evaporator ♦ Adapter - VAS 6338/3- High-pressure side to second evaporator ♦ Adapter - VAS 6338/60-

Beetle 1999 ▸; Beetle Cabriolet 2003 ▸

Flushing adapter refrigerant lines to air conditioner compressor	Flushing adapter expansion valve	Other adapters
Low-pressure side ♦ Adapter - VAS 6338/7- High-pressure side ♦ Adapter - VAS 6338/2-	♦ Adapter - VAS 6338/19- or ♦ Drilled out expansion valve ⇒ page 72	Bridge removed refrigerant lines on condenser ♦ Adapter - VAS 6338/2- , qty. 2 ♦ Hose - VAS 6338/31-

Beetle 2012 ▸; Beetle Cabriolet 2013 ▸

Flushing adapter refrigerant lines to air conditioner compressor	Flushing adapter expansion valve
Low-pressure side ♦ Adapter - VAS 6338/12- High-pressure side ♦ Adapter - VAS 6338/3-	♦ Adapter - VAS 6338/74- or ♦ Drilled out expansion valve ⇒ page 72

satelettronica

Bora 1999 ▸

Flushing adapter refrigerant lines to air conditioner compressor	Flushing adapter expansion valve	Other adapters
Low-pressure side ♦ Adapter - VAS 6338/7- High-pressure side ♦ Adapter - VAS 6338/2-	♦ Adapter - VAS 6338/19- or ♦ Drilled out expansion valve ⇒ page 72	Bridge removed refrigerant lines on condenser ♦ Adapter - VAS 6338/2- , qty. 2 ♦ Hose - VAS 6338/31-

CC 2009 ▸

Flushing adapter refrigerant lines to air conditioner compressor	Flushing adapter expansion valve
Low-pressure side ♦ Adapter - VAS 6338/12- High-pressure side ♦ Adapter - VAS 6338/3-	♦ Adapter - VAS 6338/18- or ♦ Drilled out expansion valve ⇒ page 72

e-Golf 2014 ▸

Flushing adapter refrigerant lines to air conditioner compressor	Flushing adapter expansion valve
Low-pressure side ♦ Adapter - VAS 6338/12- High-pressure side ♦ Adapter - VAS 6338/3- Electrical air conditioner compressor ♦ Adapter - VAS 6338/40- and adapter - VAS 6338/41-	♦ Adapter - VAS 6338/38- or ♦ Drilled out expansion valve ⇒ page 72

e-Golf 2014 ▸ with heat pump

Flushing adapter refrigerant lines to air conditioner compressor	Flushing adapter expansion valve	Other adapters	Miscellaneous
Low-pressure side ♦ Adapter - VAS 6338/12- connected to air conditioner service station and adapter - VAS 6338/48- . High-pressure side ♦ Adapter - VAS 6338/3- Purging electrical air conditioner compressor ♦ Adapter - VAS 6338/40- and adapter - VAS 6338/41- Adapter - VAS 6338/48- to air conditioner service station Observe notes: ⇒ page 83	Install adapter - VAS 6338/38- in place of expansion valve (or a drilled out expansion valve ⇒ page 72) After flushing, install a new expansion valve.	Bridge removed refrigerant lines on condenser ♦ Adapter - VAS 6338/6- , qty. 2 ♦ Hose - VAS 6338/31- After purging, install a new reservoir (dryer).	Start “Basic setting” in ⇒ Vehicle diagnostic tester, and start the function “Charge refrigerant circuit”. ♦ This will open the electrical valves in the refrigerant circuit. ♦ The function is active and must not be terminated until purging of the refrigerant circuit has been completed. ♦ Leave ⇒ Vehicle diagnostic tester connected to keep the valves open.

Protected by copyright. Copying for private or commercial purposes, in part or in whole, is not permitted unless authorised by Volkswagen AG. Volkswagen AG does not guarantee or accept any liability with respect to the correctness of information in this document. Copyright by Volkswagen AG.

satelettronica

Eos 2006 ▸

Flushing adapter refrigerant lines to air conditioner compressor	Flushing adapter expansion valve
Low-pressure side ◆ Adapter - VAS 6338/12- High-pressure side ◆ Adapter - VAS 6338/3-	◆ Adapter - VAS 6338/18- or ◆ Drilled out expansion valve ⇒ page 72

Fox 2005 ▸

Flushing adapter refrigerant lines to air conditioner compressor	Flushing adapter expansion valve
Low-pressure side ◆ Adapter - VAS 6338/12- High-pressure side ◆ Adapter - VAS 6338/2-	◆ Adapter - VAS 6338/64- or ◆ Drilled out expansion valve ⇒ page 72

Golf 1992; Vento 1992; Passat 1994

Flushing adapter refrigerant lines to air conditioner compressor	Flushing adapter expansion valve	Other adapters
◆ Adapter - VAS 6338/14-	◆ Adapter - VAS 6338/19- or ◆ Drilled out expansion valve ⇒ page 72	Bridge removed refrigerant lines on condenser ◆ Adapter - VAS 6338/28- and adapter - VAS 6338/29-

Golf 1998 … 2003; Golf Variant 1998 … 2003; Golf Cabriolet 1998 … 2002; Vento 1993 … 1999

Flushing adapter refrigerant lines to air conditioner compressor	Flushing adapter expansion valve	Other adapters
Low-pressure side ◆ Adapter - VAS 6338/7- High-pressure side ◆ Adapter - VAS 6338/2-	◆ Adapter - VAS 6338/19- or ◆ Drilled out expansion valve ⇒ page 72	Bridge removed refrigerant lines on condenser ◆ Adapter - VAS 6338/2- , qty. 2 ◆ Hose - VAS 6338/31-

Golf 2013 ▸, Golf Estate 2014 ▸, Golf 2017 ▸; Golf Estate 2017 ▸

Flushing adapter refrigerant lines to air conditioner compressor	Flushing adapter expansion valve
Low-pressure side ◆ Adapter - VAS 6338/12- High-pressure side ◆ Adapter - VAS 6338/3-	◆ Adapter - VAS 6338/18- or adapter - VAS 6338/38- or ◆ Drilled out expansion valve ⇒ page 72

Copyright by Volkswagen AG. Volkswagen AG does not guarantee or accept any liability with respect to the correctness of information in this document. Copying for private or commercial purposes, in part or in whole, is not permitted unless authorised by Volkswagen AG.
satelettronica

Golf 2004 ►; Golf Estate 2004 ►; Golf Cabriolet 2012 ►; Golf Plus 2005 … 2014; Golf SV 2014 ►; Golf 2014 (NAR)

Flushing adapter refrigerant lines to air conditioner compressor	Flushing adapter expansion valve
Low-pressure side ♦ Adapter - VAS 6338/12- High-pressure side ♦ Adapter - VAS 6338/3-	♦ Adapter - VAS 6338/18- or adapter - VAS 6338/38- or ♦ Drilled out expansion valve ⇒ page 72

Golf MEX 2018 ►

Flushing adapter refrigerant lines to air conditioner compressor	Flushing adapter expansion valve
Low-pressure side ♦ Adapter - VAS 6338/12- High-pressure side ♦ Adapter - VAS 6338/3-	♦ Adapter - VAS 6338/18- or adapter - VAS 6338/38- or ♦ Drilled out expansion valve ⇒ page 72

Golf GTE 2014

Flushing adapter refrigerant lines to air conditioner compressor	Flushing adapter expansion valve	Other adapters
Low-pressure side ♦ Adapter - VAS 6338/12- High-pressure side ♦ Adapter - VAS 6338/3- Electrical air conditioner compressor ♦ Adapter - VAS 6338/40- and adapter - VAS 6338/41-	♦ Adapter - VAS 6338/38- or ♦ Drilled out expansion valve ⇒ page 72	Renew shut-off valves -N541- and -N542- ♦ Shut-off tap - VAS 6338/42- , qty. 2 Remove restrictor in refrigerant line to heat exchanger for high-voltage battery and drill it out

Jetta 2005 … 2012

Flushing adapter refrigerant lines to air conditioner compressor	Flushing adapter expansion valve
Low-pressure side ♦ Adapter - VAS 6338/12- High-pressure side ♦ Adapter - VAS 6338/3-	♦ Adapter - VAS 6338/18- or ♦ Drilled out expansion valve ⇒ page 72

Jetta 2013 … 2014

Flushing adapter refrigerant lines to air conditioner compressor	Flushing adapter expansion valve
Low-pressure side ♦ Adapter - VAS 6338/12- High-pressure side ♦ Adapter - VAS 6338/3-	♦ Adapter - VAS 6338/38- or ♦ Drilled out expansion valve ⇒ page 72

Protected by copyright. Copying for private or commercial purposes, in part or in whole, is not permitted unless authorised by Volkswagen AG. Volkswagen AG does not guarantee or accept any liability with respect to the correctness of information in this document. Copyright by Volkswagen AG.

satelettronica

Jetta 2015 ▸

Flushing adapter refrigerant lines to air conditioner compressor	Flushing adapter expansion valve
Low-pressure side ◆ Adapter - VAS 6338/12- High-pressure side ◆ Adapter - VAS 6338/3-	◆ Adapter - VAS 6338/38- or ◆ Drilled out expansion valve ⇒ page 72

Lupo 1999 ▸, up to VIN 70000

Flushing adapter refrigerant lines to air conditioner compressor	Flushing adapter expansion valve	Other adapters
Low-pressure side ◆ Adapter - VAS 6338/12- High-pressure side ◆ Adapter - VAS 6338/2-	◆ Adapter - VAS 6338/19- or ◆ Drilled out expansion valve ⇒ page 72	Bridge removed refrigerant lines on condenser ◆ Adapter - VAS 6338/28- and adapter - VAS 6338/29-

Lupo 1999 ▸, from VIN 70001

Flushing adapter refrigerant lines to air conditioner compressor	Flushing adapter expansion valve	Other adapters
Low-pressure side ◆ Adapter - VAS 6338/12- High-pressure side ◆ Adapter - VAS 6338/2- and adapter - VAS 6338/7-	◆ Adapter - VAS 6338/19- or ◆ Drilled out expansion valve ⇒ page 72	Bridge removed refrigerant lines on condenser ◆ Adapter - VAS 6338/28- and adapter - VAS 6338/29-

Passat 1997… 09/2000

Flushing adapter refrigerant lines to air conditioner compressor	Other adapters and work steps
Low-pressure side ◆ Adapter - VAS 6338/12- High-pressure side ◆ Adapter - VAS 6338/2-	Bridge removed refrigerant lines on condenser ◆ Adapter - VAS 6338/9- and adapter - VAS 6338/10- ◆ Hose - VAS 6338/31- Remove restrictor and seal refrigerant lines again

Passat 10/2000 … 12/2000

Flushing adapter refrigerant lines to air conditioner compressor	Other adapters and work steps
Low-pressure side ◆ Adapter - VAS 6338/12- High-pressure side ◆ Adapter - VAS 6338/2-	Bridge removed refrigerant lines on condenser ◆ Adapter - VAS 6338/10- , qty. 2 ◆ Hose - VAS 6338/31- Remove restrictor and seal refrigerant lines again

satelettronica

Passat 2001 … 2005

Flushing adapter refrigerant lines to air conditioner compressor	Flushing adapter expansion valve
Low-pressure side ♦ Adapter - VAS 6338/12- High-pressure side ♦ Adapter - VAS 6338/3-	♦ Adapter - VAS 6338/18- or ♦ Drilled out expansion valve ⇒ page 72

Passat 2006 … 2014

Flushing adapter refrigerant lines to air conditioner compressor	Flushing adapter expansion valve
Low-pressure side ♦ Adapter - VAS 6338/12- High-pressure side ♦ Adapter - VAS 6338/3-	♦ Adapter - VAS 6338/18- or ♦ Drilled out expansion valve ⇒ page 72

Note

In the Passat 2015 and Passat Estate 2015 with bi-turbo engine, the refrigerant circuit is not flushed. In these vehicles, it would require too much effort to remove the expansion valve. If the air conditioner compressor is defective, check whether swarf has entered the condenser or whether there is swarf in the condenser outlet. If there is only swarf on the inlet side but not on the outlet side, renew only the condenser and the air conditioner compressor.

Passat 2015 ▸; Passat Estate 2015 ▸; Passat GTE 2015 ▸; Passat (NMS-US) 2016 ▸

Flushing adapter refrigerant lines to air conditioner compressor	Flushing adapter expansion valve
Low-pressure side ♦ Adapter - VAS 6338/12- High-pressure side ♦ Adapter - VAS 6338/3-	♦ Adapter - VAS 6338/18- , adapter - VAS 6338/38- or adapter - VAS 6338/74- or ♦ Drilled out expansion valve ⇒ page 72

Phaeton 2003 ▸

Flushing adapter refrigerant lines to air conditioner compressor	Other adapters and work steps
Low-pressure side ♦ Adapter - VAS 6338/12- High-pressure side on 6-cylinder petrol engine, 8- and 12-cylinder diesel engine ♦ Adapter - VAS 6338/2- High-pressure side on 6- and 10-cylinder diesel engine ♦ Adapter - VAS 6338/3-	Bridge removed refrigerant lines on condenser ♦ Adapter - VAS 6338/6- , qty. 2 ♦ Hose - VAS 6338/31- Remove restrictor and seal refrigerant lines again.

Volkswagen AG does not guarantee or accept any liability with respect to the correctness of information in this document. Copyright by Volkswagen AG. Protected by copyright. Copying for private or commercial purposes, in part or in whole, is not permitted unless authorised by Volkswagen AG.
satelettronica

Polo 1995 … 2001, up to VIN 50000

Flushing adapter refrigerant lines to air conditioner compressor	Flushing adapter expansion valve	Other adapters
♦ Adapter - VAS 6338/14-	♦ Adapter - VAS 6338/19- or ♦ Drilled out expansion valve ⇒ page 72	Bridge removed refrigerant lines on condenser ♦ Adapter - VAS 6338/28- and adapter - VAS 6338/29-

Polo 1995 … 2001, from VIN 50001

Flushing adapter refrigerant lines to air conditioner compressor	Flushing adapter expansion valve
Low-pressure side ♦ Adapter - VAS 6338/7- High-pressure side ♦ Adapter - VAS 6338/2-	♦ Adapter - VAS 6338/19- or ♦ Drilled out expansion valve ⇒ page 72

Polo 2002 … 2009

Flushing adapter refrigerant lines to air conditioner compressor	Flushing adapter expansion valve
Low-pressure side ♦ Adapter - VAS 6338/12- High-pressure side ♦ Adapter - VAS 6338/2-	♦ Adapter - VAS 6338/33- or ♦ Drilled out expansion valve ⇒ page 72

Polo 2010 … 2013

Flushing adapter refrigerant lines to air conditioner compressor	Flushing adapter expansion valve
Low-pressure side ♦ Adapter - VAS 6338/12- High-pressure side ♦ Adapter - VAS 6338/3-	♦ Adapter - VAS 6338/34- or ♦ Drilled out expansion valve ⇒ page 72

Polo IND 2010 ►; Polo RUS 2011 ►; Polo MY 2014 ►

Flushing adapter refrigerant lines to air conditioner compressor	Flushing adapter expansion valve
Low-pressure side ♦ Adapter - VAS 6338/12- High-pressure side ♦ Adapter - VAS 6338/3- or adapter - VAS 6338/2-	♦ Adapter - VAS 6338/34- or ♦ Drilled out expansion valve ⇒ page 72

Protected by copyright. Copying for private or commercial purposes, in part or in whole, is not permitted unless authorised by Volkswagen AG. Volkswagen AG does not guarantee or accept any liability with respect to the correctness of information in this document. Copyright by Volkswagen AG.
satelettronica

Polo 2014 ... 2017

Flushing adapter refrigerant lines to air conditioner compressor	Flushing adapter expansion valve
Low-pressure side ♦ Adapter - VAS 6338/12- High-pressure side ♦ Adapter - VAS 6338/3- or adapter - VAS 6338/2-	♦ Adapter - VAS 6338/39- or ♦ Drilled out expansion valve ⇒ page 72

Polo 2018 ▸

Flushing adapter refrigerant lines to air conditioner compressor	Flushing adapter expansion valve
Low-pressure side ♦ Adapter - VAS 6338/12- High-pressure side ♦ Adapter - VAS 6338/3-	♦ Adapter - VAS 6338/38- or ♦ Drilled out expansion valve ⇒ page 72

Scirocco 2009 ▸

Flushing adapter refrigerant lines to air conditioner compressor	Flushing adapter expansion valve
Low-pressure side ♦ Adapter - VAS 6338/12- High-pressure side ♦ Adapter - VAS 6338/3-	♦ Adapter - VAS 6338/18- or ♦ Drilled out expansion valve ⇒ page 72

Sharan 1996 ... 2010

Flushing adapter refrigerant lines to air conditioner compressor	Flushing adapter expansion valve	Sealing adapter and flushing adapter for vehicles with second evaporator	Other adapters and work steps
Low-pressure side ♦ Adapter - VAS 6338/7- High-pressure side ♦ Adapter - VAS 6338/2-	♦ Adapter - VAS 6338/35- or ♦ Drilled out expansion valve ⇒ page 72	♦ Lower-pressure line for 2nd evaporator adapter - V.A.G 1785/7- ♦ High-pressure line for 2nd evaporator adapter -V.A.G 1785/5- ♦ Adapter - V.A.G 1785/3- with sealing cap -VAS 6338/30- to seal front refrigerant circuit. ♦ Adapter - V.A.G 1785/1- with sealing cap -VAS 6338/30- to seal front refrigerant circuit.	Remove receiver and connect refrigerant pipes to adapter - VAS 6338/37- .

Protected by copyright. Copying for private or commercial purposes, in part or in whole, is not permitted unless authorised by Volkswagen AG. Volkswagen AG does not guarantee or accept any liability with respect to the correctness of information. Copyright by Volkswagen AG.
satelettronica

Sharan 2011 ▸

Flushing adapter refrigerant lines to air conditioner compressor	Flushing adapter expansion valve	Sealing adapter and flushing adapter for vehicles with second evaporator
Low-pressure side ♦ Adapter - VAS 6338/12- High-pressure side ♦ Adapter - VAS 6338/3-	Front refrigerant circuit ♦ Adapter - VAS 6338/18- or ♦ Drilled out expansion valve ⇒ page 72 Rear refrigerant circuit ♦ Adapter - VAS 6338/33- or ♦ Drilled out expansion valve ⇒ page 72	Low-pressure side of front refrigerant circuit ♦ Sealing adapter - VAS 6338/11- High-pressure side of front refrigerant circuit ♦ Sealing adapter - VAS 6338/5- Low-pressure side to second evaporator ♦ Adapter - VAS 6338/3- High-pressure side to second evaporator ♦ Adapter - VAS 6338/4-

T-Cross 2019 ▸

Flushing adapter refrigerant lines to air conditioner compressor	Flushing adapter expansion valve
Low-pressure side ♦ Adapter - VAS 6338/12- High-pressure side ♦ Adapter - VAS 6338/3-	♦ Adapter - VAS 6338/38- or ♦ Drilled out expansion valve ⇒ page 72

T-Roc 2018 ▸

Flushing adapter refrigerant lines to air conditioner compressor	Flushing adapter expansion valve
Low-pressure side ♦ Adapter - VAS 6338/12- High-pressure side ♦ Adapter - VAS 6338/3-	♦ Adapter - VAS 6338/38- or ♦ Drilled out expansion valve ⇒ page 72

Tiguan 2008 … 2015

Flushing adapter refrigerant lines to air conditioner compressor	Flushing adapter expansion valve
Low-pressure side ♦ Adapter - VAS 6338/12- High-pressure side ♦ Adapter - VAS 6338/3-	♦ Adapter - VAS 6338/18- or ♦ Drilled out expansion valve ⇒ page 72

Protected by copyright. Copying for private or commercial purposes, in part or in whole, is not permitted unless authorised by Volkswagen AG. Volkswagen AG does not guarantee or accept any liability with respect to the correctness of information in this document. Copyright by Volkswagen AG.

sateletronica

Tiguan 2016 ▸; Tiguan RUS 2017 ▸

Flushing adapter refrigerant lines to air conditioner compressor	Flushing adapter expansion valve
Low-pressure side ♦ Adapter - VAS 6338/12- High-pressure side ♦ Adapter - VAS 6338/3-	♦ Adapter - VAS 6338/38- or ♦ Drilled out expansion valve ⇒ page 72

Touareg 2003 … 2010, up to VIN 50000

Flushing adapter refrigerant lines to air conditioner compressor	Flushing adapter expansion valve	Sealing adapter and flushing adapter for vehicles with second evaporator
Low-pressure side ♦ Adapter - VAS 6338/12- High-pressure side ♦ Adapter - VAS 6338/2- or adapter - VAS 6338/3-	♦ Adapter - VAS 6338/17- or ♦ Drilled out expansion valve ⇒ page 72	Low-pressure side of front refrigerant circuit ♦ Sealing adapter - VAS 6338/11- High-pressure side of front refrigerant circuit ♦ Sealing adapter - VAS 6338/5- Low-pressure side to second evaporator ♦ Adapter - VAS 6338/3- High-pressure side to second evaporator ♦ Adapter - VAS 6338/4-

Touareg 2003 … 2010, from VIN 50001

Flushing adapter refrigerant lines to air conditioner compressor	Flushing adapter expansion valve	Sealing adapter and flushing adapter for vehicles with second evaporator
Low-pressure side ♦ Adapter - VAS 6338/12- High-pressure side ♦ Adapter - VAS 6338/2- or adapter - VAS 6338/3-	♦ Adapter - VAS 6338/17- or adapter - VAS 6338/33- or ♦ Drilled out expansion valve ⇒ page 72	Low-pressure side of front refrigerant circuit ♦ Sealing adapter - VAS 6338/11- High-pressure side of front refrigerant circuit ♦ Sealing adapter - VAS 6338/5- Low-pressure side to second evaporator ♦ Adapter - VAS 6338/3- High-pressure side to second evaporator ♦ Adapter - VAS 6338/4-

Protected by copyright. Copying for private or commercial purposes, in part or in whole, is not permitted unless authorised by Volkswagen AG. Volkswagen AG does not guarantee or accept any liability with respect to the correctness of information in this document. Copyright by Volkswagen AG.

satelettronica

Touareg 2010 … 2018; Touareg Hybrid 2010 ▸

Flushing adapter refrigerant lines to air conditioner compressor	Flushing adapter expansion valve	Sealing adapter and flushing adapter for vehicles with second evaporator
Low-pressure side ♦ Adapter - VAS 6338/12- High-pressure side ♦ Adapter - VAS 6338/2- or adapter - VAS 6338/3- Electrical air conditioner compressor ♦ Adapter - VAS 6338/40- and adapter - VAS 6338/41-	♦ Adapter - VAS 6338/17- or adapter - VAS 6338/33- or ♦ Drilled out expansion valve ⇒ page 72	Low-pressure side of front refrigerant circuit ♦ Sealing adapter - VAS 6338/11- High-pressure side of front refrigerant circuit ♦ Sealing adapter - VAS 6338/5- Low-pressure side to second evaporator ♦ Adapter - VAS 6338/3- High-pressure side to second evaporator ♦ Adapter - VAS 6338/4-

Touareg 2018 ▸

Flushing adapter refrigerant lines to air conditioner compressor	Flushing adapter expansion valve
Low-pressure side ♦ Adapter - VAS 6338/12- High-pressure side ♦ Adapter - VAS 6338/3-	♦ Adapter - VAS 6338/44- or ♦ Drilled out expansion valve ⇒ page 72

Touareg Hybrid 2018 ▸

Flushing adapter refrigerant lines to air conditioner compressor	Flushing adapter expansion valve	Other adapters	Miscellaneous
Low-pressure side ♦ Adapter - VAS 6338/12- connected to air conditioner service station and adapter - VAS 6338/48- . High-pressure side ♦ Adapter - VAS 6338/3-	♦ Adapter - VAS 6338/44- Or ♦ Drilled out expansion valve ⇒ page 72	Receiver ♦ No adapter required. Dryer is removed from receiver on condenser, and opening is sealed again afterwards. ♦ After purging, install a new reservoir (dryer). Shut-off valve ♦ Shut-off valve fitted (refrigerant shut-off valve for heater and air conditioner unit - N541-) is removed, and shut-off valve - VAS 6338/42- is installed instead ♦ Renew refrigerant shut-off valve for heater and air conditioner unit - N541- after flushing.	Start “Basic setting” in ⇒ Vehicle diagnostic tester, and start the function “Charge refrigerant circuit”. ♦ This will open the electrical valves in the refrigerant circuit. ♦ The function is active and must not be terminated until purging of the refrigerant circuit has been completed. ♦ Leave ⇒ Vehicle diagnostic tester connected to keep the valves open.

Protected by copyright. Copying for private or commercial purposes, in part or in whole, is not permitted unless authorised by Volkswagen AG. Volkswagen AG does not guarantee or accept any liability with respect to the correctness and completeness of this document. Copyright by Volkswagen AG.

satelettronica

Touran 2003 … 2015

Flushing adapter refrigerant lines to air conditioner compressor	Flushing adapter expansion valve
Low-pressure side ♦ Adapter - VAS 6338/12- High-pressure side ♦ Adapter - VAS 6338/3-	♦ Adapter - VAS 6338/18- or ♦ Drilled out expansion valve ⇒ page 72

Touran 2016 ▸

Flushing adapter refrigerant lines to air conditioner compressor	Flushing adapter expansion valve
Low-pressure side ♦ Adapter - VAS 6338/12- High-pressure side ♦ Adapter - VAS 6338/3-	♦ Adapter - VAS 6338/38- or ♦ Drilled out expansion valve ⇒ page 72

up! 2012 ▸, e-up! 2014 ▸

Flushing adapter refrigerant lines to air conditioner compressor	Flushing adapter expansion valve
Low-pressure side ♦ Adapter - VAS 6338/12- High-pressure side ♦ Adapter - VAS 6338/3- Electrical air conditioner compressor ♦ Adapter - VAS 6338/40- and adapter - VAS 6338/41-	♦ Adapter - VAS 6338/34- or adapter - VAS 6338/36- or ♦ Drilled out expansion valve ⇒ page 72

Protected by copyright. Copying for private or commercial purposes, in part or in whole, is not permitted unless authorised by Volkswagen AG. Volkswagen AG does not guarantee or accept any liability with respect to the correctness of information in this document. Copyright by Volkswagen AG.

satelettronica

11 Clearing refrigerant circuit of contaminants, commercial vehicles

This vehicle is electrified by ABT e-Line.

This manual may have lost its validity due to modifications by ABT e-Line, or may have to be supplemented by additional repair instructions from ABT e-Line.

Please refer to the Electronic Service Information System (ElsaPro), section “Superstructures and modifications” for relevant repair manuals regarding modifications by ABT e-Line.

These can also be obtained from ABT e-Line.

⇒ “11.1 Vehicles with high-voltage system”, page 100

⇒ “11.2 Flushing refrigerant circuit with refrigerant R134a”, page 101

⇒ “11.3 Adapters for setting up flushing circuits”, page 102

⇒ “11.4 Procedure for setting up and flushing refrigerant circuit, Amarok 2010 ►”, page 105

⇒ “11.5 Procedure for setting up and flushing refrigerant circuit, Caddy 2004 ►”, page 110

⇒ “11.6 Procedure for setting up and flushing refrigerant circuit, Crafter ►2017”, page 117

⇒ “11.7 Procedure for setting up and flushing refrigerant circuit, Crafter 2017 ► or MAN TGE ►, Crafter Grand California ►”, page 130

⇒ “11.8 Procedure for setting up and flushing refrigerant circuit, Transporter 2016 ►, Transporter 2020 ►”, page 143

11.1 Vehicles with high-voltage system

Danger to life from high voltage

The high-voltage system is under high voltage. Damage to high-voltage components can result in severe or fatal injury from electric shock.

– Perform visual check of high-voltage components and high-voltage cables.

– Never use cutting or forming tools, or any other sharp-edged tools.

– Never use heat sources such as welding, brazing, soldering, hot air or thermal bonding equipment.

Protected by copyright. Copying for private or commercial purposes, in part or in whole, is not permitted unless authorised by Volkswagen AG. Volkswagen AG does not guarantee or accept any liability with respect to the correctness of information in this document. Copyright by Volkswagen AG.

satelettronica

This vehicle is electrified by ABT e-Line.

This manual may have lost its validity due to modifications by ABT e-Line, or may have to be supplemented by additional repair instructions from ABT e-Line.

Please refer to the Electronic Service Information System (ElsaPro), section “Superstructures and modifications” for relevant repair manuals regarding modifications by ABT e-Line.

These can also be obtained from ABT e-Line.

If repair work in the vicinity of high-voltage components and cables is necessary, carry out a visual check for damage on high-voltage components and cables ⇒ Electrical system; Rep. gr. 93 ; General warning instructions for work on the high-voltage system .

If repair work on high-voltage components is necessary, de-energise the high-voltage system ⇒ Electrical system; Rep. gr. 93 ; De-energising high-voltage system , and “observe the general warning instructions for work on the high-voltage system” ⇒ Electrical system; Rep. gr. 93 ; General warning instructions for work on the high-voltage system .

Note

- *Volkswagen rejects the use of chemical substances for purposes of sealing leaks in refrigerant circuits.*
- *Chemical substances used for sealing leaks in refrigerant circuits often react with the surrounding air and the humidity contained within. They cause deposits to build up in the refrigerant circuit (and your air conditioner service station) valves to malfunction and defects in other components with which they come into contact. These deposits cannot be completely removed from the components (not even by flushing). The refrigerant circuit can only be repaired by replacing all components that have come into contact with this substance.*
- *It is often not possible to detect from the outside whether chemical substances have been used to seal leaks in the refrigerant circuit. The adhesive label that serves to identify its use can usually not be found. Therefore, exercise caution on vehicles for which you have no service or repair record.*

- In order to remove dirt (e.g. abraded matter from a defective air conditioner compressor) as well as old refrigerant oil as cleanly as possible and with as little work as possible, flush the refrigerant circuit with R134a refrigerant.

11.2 Flushing refrigerant circuit with refrigerant R134a

This vehicle is electrified by ABT e-Line.

This manual may have lost its validity due to modifications by ABT e-Line, or may have to be supplemented by additional repair instructions from ABT e-Line.

Please refer to the Electronic Service Information System (ElsaPro), section “Superstructures and modifications” for relevant repair manuals regarding modifications by ABT e-Line.

These can also be obtained from ABT e-Line.

The refrigerant circuit must be flushed with refrigerant R134a if

- Dirt or other contaminants are in the refrigerant circuit.
- If during evacuation of a leak-tight refrigerant circuit the vacuum display is not constant on gauge (moisture in the refrigerant circuit, which generates vapour pressure).
- If the refrigerant circuit has been left open for longer than normally required for repairs (e.g. following an accident).

satelettronica

- Pressure and temperature measurements in the refrigerant circuit indicate that there is moisture in the refrigerant circuit.
- There is doubt about the amount of refrigerant oil in the refrigerant circuit. If the air conditioner compressor is to be reinstalled, drain refrigerant oil out of air conditioner compressor via the block connections. To facilitate this process, turn the air conditioner compressor over by hand at the poly V-belt pulley or coupling disc of the magnetic coupling. After purging, fill refrigerant circuit with total amount of refrigerant oil (50 g direct into air conditioner compressor) according to ⇒ vehicle-specific workshop manual . Take account of oil volume for 2nd evaporator system.
- The air conditioner compressor has to be exchanged because of internal damage (e.g. noisy or lack of power).
- If it is required by the workshop manual for the specific vehicle following the renewal of certain components.
- a different air conditioner compressor with other refrigerant oil is to be fitted.

11.3 Adapters for setting up flushing circuits

– The desiccant bag and the desiccant cartridge must always be removed before any flushing routine. Then close the receiver again.

– On condensers with a permanent dryer, this can be flushed along with the other components. A new condenser must then be installed.

Note

If a flushed refrigerant circuit is not reassembled immediately after flushing, the adapters must be left on the connections. These as well as components that are still open must be sealed with clean bungs from engine bung set - VAS 6122- .

On successful completion of flushing procedure, remove all adapters and renew following components during assembly

- Air conditioner compressor
- Restrictor and expansion valve
- Desiccant bag and desiccant cartridge
- Evacuating and charging valve, high-pressure side and low-pressure side
- Oil seals

Note

Only flushing adapters for the following commercial vehicles are listed:

- Caddy 1996 … 2004 ⇒ page 103
- LT 2 from 1997 ⇒ page 103
- Transporter 1991 … 1995 ⇒ page 103
- Transporter 1996 … 2004 ⇒ page 104
- Transporter model 7H 2004 … 2010 ⇒ page 104
- Transporter model 7J 2004 … 2010 ⇒ page 104

Protected by copyright. Copying for private or commercial purposes, in part or in whole, is not permitted unless authorised by Volkswagen AG. Volkswagen AG does not guarantee or accept any liability with respect to the correctness of information in this document. Copyright by Volkswagen AG.
satelettronica

- Transporter 2010 … 2016 ⇒ page 105
- e-Crafter 2019 ▸; e-TGE 2019 ▸ with heat pump ⇒ page 105

Note

All commercial vehicles listed here are described in separate chapters:

- Amarok 2010 ▸ ⇒ page 105
- Caddy 2004 ▸ ⇒ page 110
- Crafter ▸2017 ⇒ page 117
- Crafter 2017 or MAN TGE ▸, Crafter Grand California ▸ ⇒ page 130
- Transporter 2016 ▸, Transporter 2020 ▸ ⇒ page 143

Caddy 1996 … 2004

Flushing adapter refrigerant lines to air conditioner compressor	Flushing adapter expansion valve	Other adapters
Low-pressure side ♦ Adapter - VAS 6338/4- High-pressure side ♦ Adapter - VAS 6338/2- or adapter - VAS 6338/14-	♦ Adapter - VAS 6338/19- or ♦ Drilled out expansion valve ⇒ page 72	Bridge removed refrigerant lines on condenser ♦ Adapter - VAS 6338/28- and adapter - VAS 6338/29-

LT 2 from 1997

Flushing adapter refrigerant lines to air conditioner compressor	Flushing adapter expansion valve	Sealing adapter and flushing adapter for vehicles with second evaporator
Low-pressure side ♦ Adapter - VAS 6338/7- High-pressure side ♦ Adapter - VAS 6338/2- or adapter - VAS 6338/20-	♦ Adapter - VAS 6338/56- or ♦ Drilled out expansion valve ⇒ page 72	Bridge removed refrigerant lines on condenser ♦ Adapter - VAS 6338/29- , qty. 2 ♦ Hose - VAS 6338/31-

Transporter 1991 … 1995

Flushing adapter refrigerant lines to air conditioner compressor	Flushing adapter expansion valve	Sealing adapter and flushing adapter for vehicles with second evaporator	Miscellaneous
♦ Adapter - VAS 6338/54-	♦ Adapter - VAS 6338/55- or ♦ Drilled out expansion valve ⇒ page 72	♦ Adapter - VAS 6338/29- for receiver ♦ Adapter - VAS 6338/57- for refrigerant line of 2nd Evaporator ♦ Adapter - VAS 6338/58- for refrigerant line of 2nd Evaporator	Vehicles with auxiliary evaporator on roof ♦ Adapter - VAS 6338/51- and adapter - VAS 6338/52-

Protected by copyright. Copying for private or commercial purposes, in part or in whole, is not permitted unless authorised by Volkswagen AG. Volkswagen AG does not guarantee or accept any liability with respect to the correctness of information in this document.
satelettronica

Transporter 1996 … 2004

Flushing adapter refrigerant lines to air conditioner compressor	Flushing adapter expansion valve	Sealing adapter and flushing adapter for vehicles with second evaporator	Miscellaneous
Low-pressure side ♦ Adapter - VAS 6338/7- High-pressure side ♦ Adapter - VAS 6338/2-	♦ Adapter - VAS 6338/55- or ♦ Drilled out expansion valve ⇒ page 72	♦ Adapter - VAS 6338/29- for receiver ♦ Adapter - VAS 6338/57- for refrigerant line of 2nd Evaporator ♦ Adapter - VAS 6338/58- for refrigerant line of 2nd Evaporator	Vehicles with auxiliary evaporator on roof ♦ Adapter - VAS 6338/51- and adapter - VAS 6338/52-

Transporter model 7H 2004 … 2010

Flushing adapter refrigerant lines to air conditioner compressor	Flushing adapter expansion valve	Sealing adapter and flushing adapter for vehicles with second evaporator
Low-pressure side ♦ Adapter - VAS 6338/7- or adapter - VAS 6338/12- High-pressure side ♦ Adapter - VAS 6338/2- or adapter - VAS 6338/3-	Front refrigerant circuit ♦ Adapter - VAS 6338/56- or ♦ Drilled out expansion valve ⇒ page 72 Rear refrigerant circuit ♦ Adapter - VAS 6338/33- or ♦ Drilled out expansion valve ⇒ page 72	Low-pressure side of front refrigerant circuit ♦ Sealing adapter - VAS 6338/11- High-pressure side of front refrigerant circuit ♦ Sealing adapter - VAS 6338/5- Low-pressure side to second evaporator ♦ Adapter - VAS 6338/3- High-pressure side to second evaporator ♦ Adapter - VAS 6338/4-

Transporter model 7J 2004 … 2010

Flushing adapter refrigerant lines to air conditioner compressor	Flushing adapter expansion valve	Sealing adapter and flushing adapter for vehicles with second evaporator
Low-pressure side ♦ Adapter - VAS 6338/7- , adapter - VAS 6338/12- or adapter - VAS 6338/52- High-pressure side ♦ Adapter - VAS 6338/2- , adapter - VAS 6338/3- or adapter - VAS 6338/51-	Front refrigerant circuit ♦ Adapter - VAS 6338/56- or ♦ Drilled out expansion valve ⇒ page 72 Rear refrigerant circuit ♦ Adapter - VAS 6338/56- or ♦ Drilled out expansion valve ⇒ page 72	Low-pressure side of front refrigerant circuit ♦ Sealing adapter - VAS 6338/11- High-pressure side of front refrigerant circuit ♦ Sealing adapter - VAS 6338/5- Low-pressure side to second evaporator ♦ Adapter - VAS 6338/3- High-pressure side to second evaporator ♦ Adapter - VAS 6338/4-

Protected by copyright. Copying for private or commercial purposes, in whole or in part, is not permitted unless authorised by Volkswagen AG. Volkswagen AG does not guarantee or accept any liability with respect to the correctness of information in this document. Copyright by Volkswagen AG.
satelettronica

Transporter 2010 … 2016, Transporter 2020 ▸

Flushing adapter refrigerant lines to air conditioner compressor	Flushing adapter expansion valve	Sealing adapter and flushing adapter for vehicles with second evaporator
Low-pressure side ♦ Adapter - VAS 6338/12- High-pressure side ♦ Adapter - VAS 6338/3-	♦ Adapter - VAS 6338/56- or ♦ Drilled out expansion valve ⇒ page 72	Low-pressure side of front refrigerant circuit ♦ Sealing adapter - VAS 6338/11- High-pressure side of front refrigerant circuit ♦ Sealing adapter - VAS 6338/5- Low-pressure side to second evaporator ♦ Adapter - VAS 6338/3- High-pressure side to second evaporator ♦ Adapter - VAS 6338/4-

e-Crafter 2019 ▸; e-TGE 2019 ▸ with heat pump

Flushing adapter refrigerant lines to air conditioner compressor	Flushing adapter expansion valve	Other adapters	Miscellaneous
Low-pressure side ♦ Adapter - VAS 6338/12- High-pressure side ♦ Adapter - VAS 6338/3- Electrical air conditioner compressor ♦ Adapter - VAS 6338/40- and adapter - VAS 6338/41-	Use ⇒ Vehicle diagnostic tester to perform function `Charge refrigerant circuit`. The function is active and must not be terminated until purging of the refrigerant circuit has been completed.	Bridge removed refrigerant lines on condenser ♦ Adapter - VAS 6338/6- , qty. 2 ♦ Hose - VAS 6338/31-	Start function “Charge refrigerant circuit” using ⇒ Vehicle diagnostic tester. Leave ⇒ Vehicle diagnostic tester connected to keep the valves open.

11.4 Procedure for setting up and flushing refrigerant circuit, Amarok 2010 ▸

⇒ “11.4.1 Connection diagram for flushing circuit”, page 105

⇒ “11.4.2 Procedure for setting up and flushing refrigerant circuit”, page 106

11.4.1 Connection diagram for flushing circuit

Note

The following connection diagram was created for the 2.0 l common rail engine equipped for left-hand drive. The connection diagram for other engines should be adapted accordingly.

Protected by copyright. Copying for private or commercial purposes, in part or in whole, is not permitted unless authorised by Volkswagen AG. Volkswagen AG does not guarantee or accept any liability with respect to the correctness of information in this document. Copyright by Volkswagen AG.
satelettronica

1 - Refrigerant lines

- ❑ Qty. 2
- ❑ High-pressure and low-pressure side

2 - Expansion valve adapter - VAS 6338/33-

- ❑ from adapter set for refrigerant circuit - VAS 6338/50-

3 - Refrigerant line

- ❑ Low-pressure side

4 - Refrigerant line

- ❑ High-pressure side

5 - Adapter - VAS 6338/3-

- ❑ from adapter set for refrigerant circuit - VAS 6338/50-

6 - Refrigerant hose

- ❑ Low-pressure side
- ❑ from air conditioner service station

7 - Adapter - VAS 6338/12-

- ❑ from adapter set for refrigerant circuit - VAS 6338/50-

8 - Refrigerant hose

- ❑ High-pressure side
- ❑ from air conditioner service station

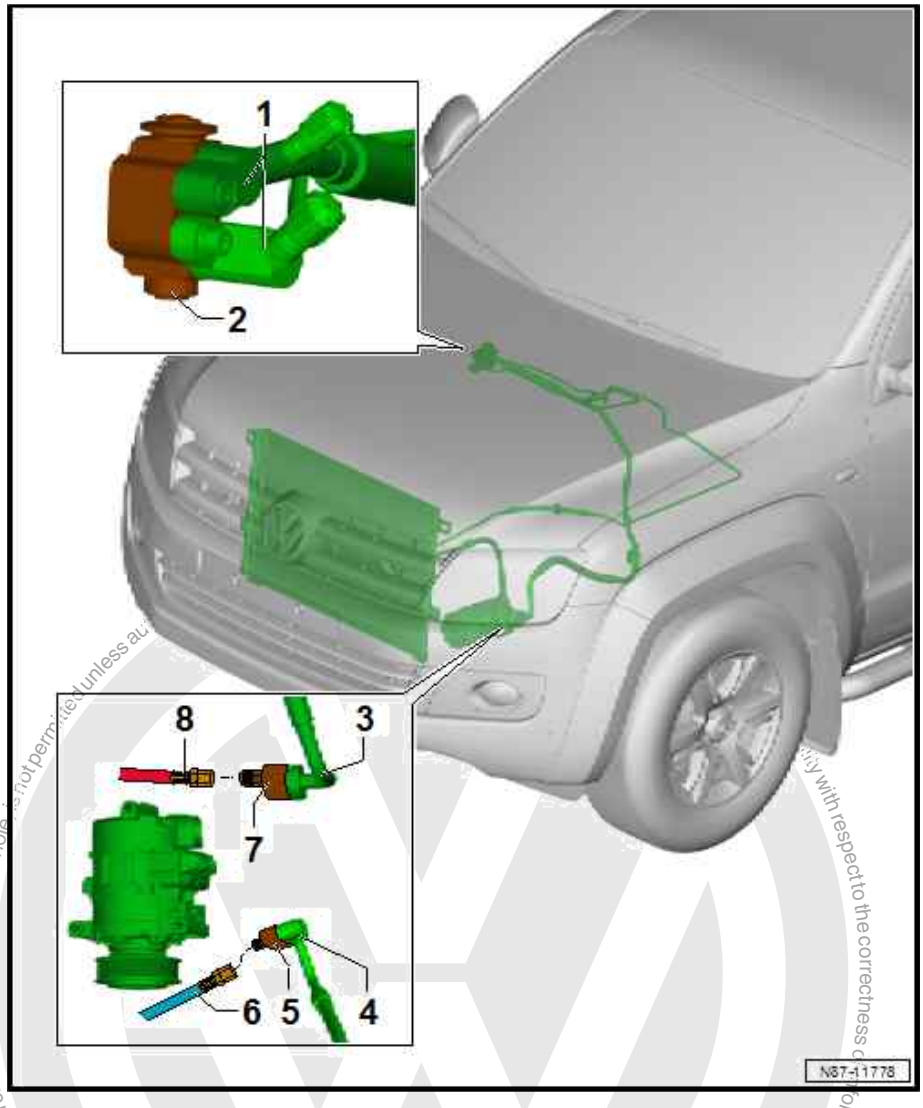

11.4.2 Procedure for setting up and flushing refrigerant circuit

Special tools and workshop equipment required

- ♦ Torque wrench - V.A.G 1410-

Protected by copyright. Copying for private or commercial purposes, in part or in whole, is not permitted unless authorised. Copyright by Volkswagen AG. No liability with respect to the correctness of information in this document.
satelettronica

- Engine bung set - VAS 6122-

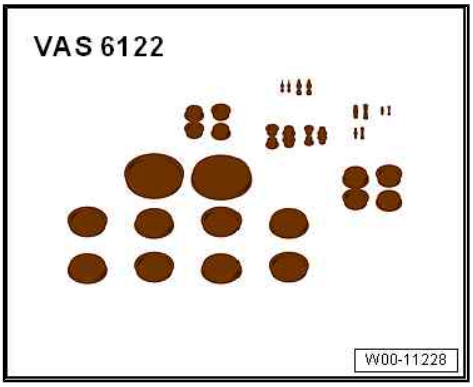

- Adapter set for refrigerant circuit - VAS 6338/50-

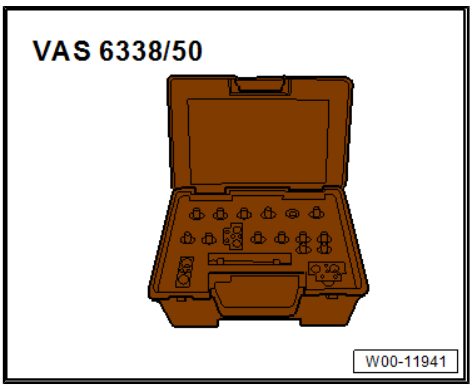

- Air conditioner service station , e.g. air conditioner service station - VAS 6746A-

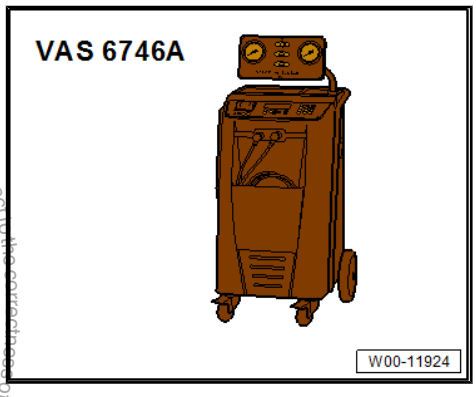

- Drill bit, ∅ 6 mm

Note

- *The following procedure was created for the 2.0 l common rail engine equipped for left-hand drive. The procedure for other engines should be adapted accordingly.*
- *Flushing a contaminated refrigerant circuit is carried out against the direction of normal flow.*
- *To install the individual flushing adapters, the original threaded connections (nuts and bolts) are to be used and tightened to the respective torque.*

Copyright by Volkswagen AG. Volkswagen AG does not guarantee or accept any liability with respect to the correctness of information in this document. Copyright by Volkswagen AG. Protected by copyright. Copying for private or commercial purposes, in part or in whole, is not permitted unless authorised by Volkswagen AG.
satelettronica

Setting up

Prepare air conditioner service station as follows

Air conditioner service station with integrated flushing device

– Unscrew quick-release fastener -1- on refrigerant hose on high-pressure side (red) -2-.

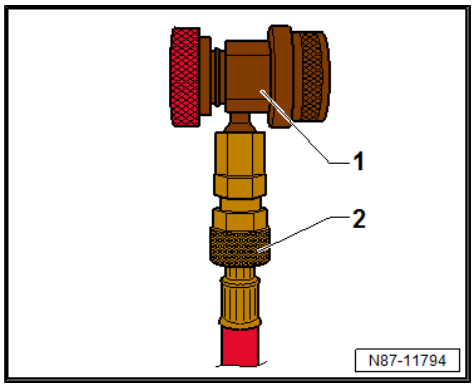

– Unscrew quick-release fastener -1- on refrigerant hose on low-pressure side (blue) -2-.

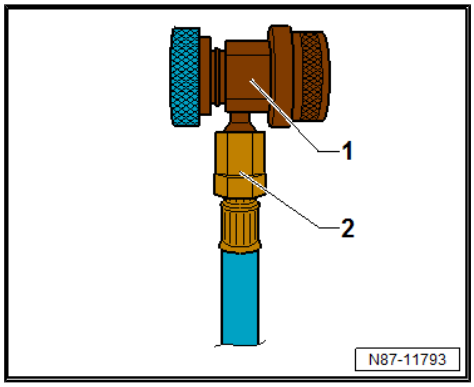

Air conditioner service station with external flushing device

– Unscrew quick-release fastener -1- on refrigerant hose on high-pressure side (red) -2-.

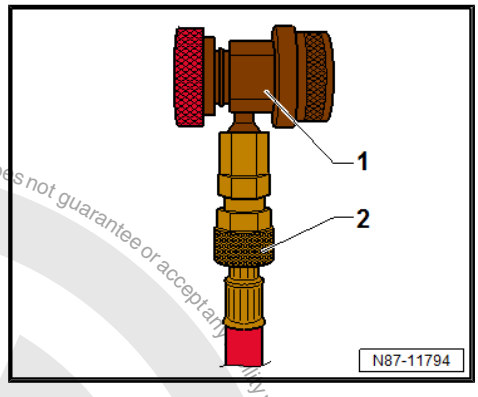

Protected by copyright. Copying for private or commercial purposes, in part or in whole, is not permitted unless authorised by Volkswagen AG. Volkswagen AG does not guarantee or accept any liability with respect to the correctness of information in this document. Copyright by Volkswagen AG.

satelettronica

– Connect coolant hose on low-pressure side (blue) -1- from air conditioner service station to filter cartridge -3- of flushing device using quick-release fastener -2-.

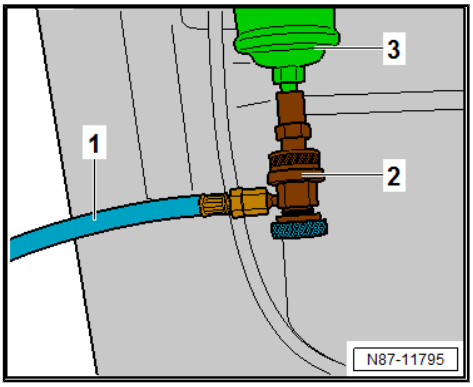

Note

The flushing procedure is carried out with the existing coolant hose (blue) of the external flushing device.

Continuation for all

– Check quantity of refrigerant oil in refrigerant bottle via menu of air conditioner service station .

• There must be at least 7 kg of R134a refrigerant.

– Remove expansion valve ⇒ Heating, air conditioning; Rep. gr. 87 ; Refrigerant circuit; Removing and installing expansion valve .

– Install expansion valve adapter - VAS 6338/33- from adapter set for refrigerant circuit - VAS 6338/50- .

– Connect refrigerant lines to expansion valve adapter - VAS 6338/33- .

– Remove desiccant bag ⇒ Heating, air conditioning system; Rep. gr. 87 ; Refrigerant circuit; Removing and installing desiccant bag/desiccant cartridge .

– Close receiver on condenser again.

– Remove air conditioner compressor ⇒ Heating, air conditioning; Rep. gr. 87 ; Air conditioner compressor; Removing and installing air conditioner compressor .

– Connect refrigerant line of air conditioner compressor on high-pressure side (smaller diameter) -1- to adapter - VAS 6338/3--4-.

– Connect refrigerant line of air conditioner compressor on low-pressure side (larger diameter) -2- to adapter - VAS 6338/12--3-.

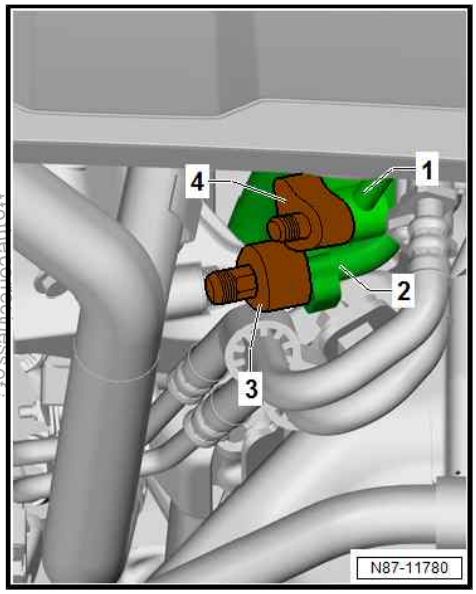

Protected by copyright. Copyright by Volkswagen AG.
Copyright by Volkswagen AG. Volkswagen AG does not guarantee or accept any liability with respect to the correctness of information in this document.
Protected by copyright. Copying for private or commercial purposes, in part or in whole, is not permitted unless authorised by Volkswagen AG.
satelettronica

– Connect refrigerant hose on low-pressure side (blue) -1- of air conditioner service station to threaded connection of adapter - VAS 6338/3- -2- of refrigerant line for air conditioner service station on high-pressure side (smaller diameter) -3-.

– Connect refrigerant hose on high-pressure side (red) -6- of air conditioner service station to threaded connection of adapter - VAS 6338/12- -5- of refrigerant line for air conditioner service station on low-pressure side (larger diameter) -4-.

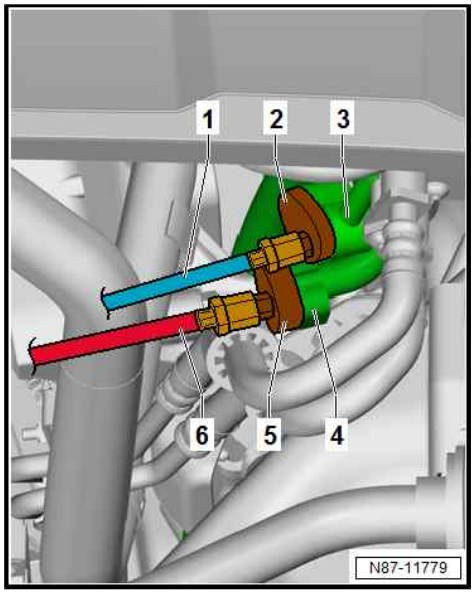

Flush

– Start flushing procedure via menu of air conditioner service station .

Note

If a flushed refrigerant circuit is not reassembled immediately after flushing, the adapters must be left on the connections. These as well as components that are still open must be sealed with clean bungs from engine bung set - VAS 6122- .

On successful completion of flushing procedure, remove all adapters and renew following components during assembly

- Air conditioner compressor
- Expansion valve
- Desiccant bag
- Evacuating and charging valve, high-pressure side and low-pressure side
- Oil seals

– Charge refrigerant circuit ⇒ page 54 .

– Perform leakage test on reattached line connections of refrigerant circuit ⇒ page 57 .

– Bring air conditioning system into operation after charging refrigerant circuit ⇒ Heating, air conditioning; Rep. gr. 87 ; Refrigerant circuit; Bringing air conditioning system into operation after charging refrigerant circuit .

11.5 Procedure for setting up and flushing refrigerant circuit, Caddy 2004 ►

⇒ “11.5.1 Connection diagram for flushing circuit”, page 110

⇒ “11.5.2 Procedure for setting up and flushing refrigerant circuit”, page 111

11.5.1 Connection diagram for flushing circuit

Note

The following connection diagram was created for the 2.0 l common rail engine equipped for left-hand drive. The connection diagram for other engines should be adapted accordingly.

Protected by copyright. Copyright by Volkswagen AG. Copy or publication of this page or in whole is not permitted unless authorised by Volkswagen AG. Volkswagen AG does not guarantee or accept any liability with respect to the correctness of information in this document.
satelettronica

Volkswagen AG. Volkswagen AG does not guarantee or accept any liability with respect to the correctness of information in this document. Copy

1 - Refrigerant hose

- ❑ Low-pressure side
- ❑ from air conditioner service station

2 - Adapter - VAS 6338/3- or adapter - VAS 6338/2-

- ❑ from adapter set for refrigerant circuit - VAS 6338/1-

3 - Refrigerant line

- ❑ High-pressure side

4 - Refrigerant line

- ❑ Low-pressure side

5 - Adapter - VAS 6338/12- or adapter - VAS 6338/7-

- ❑ from adapter set for refrigerant circuit - VAS 6338/1-

6 - Refrigerant hose

- ❑ High-pressure side
- ❑ from air conditioner service station

7 - Expansion valve adapter - VAS 6338/18-

- ❑ from adapter set for refrigerant circuit - VAS 6338/1-

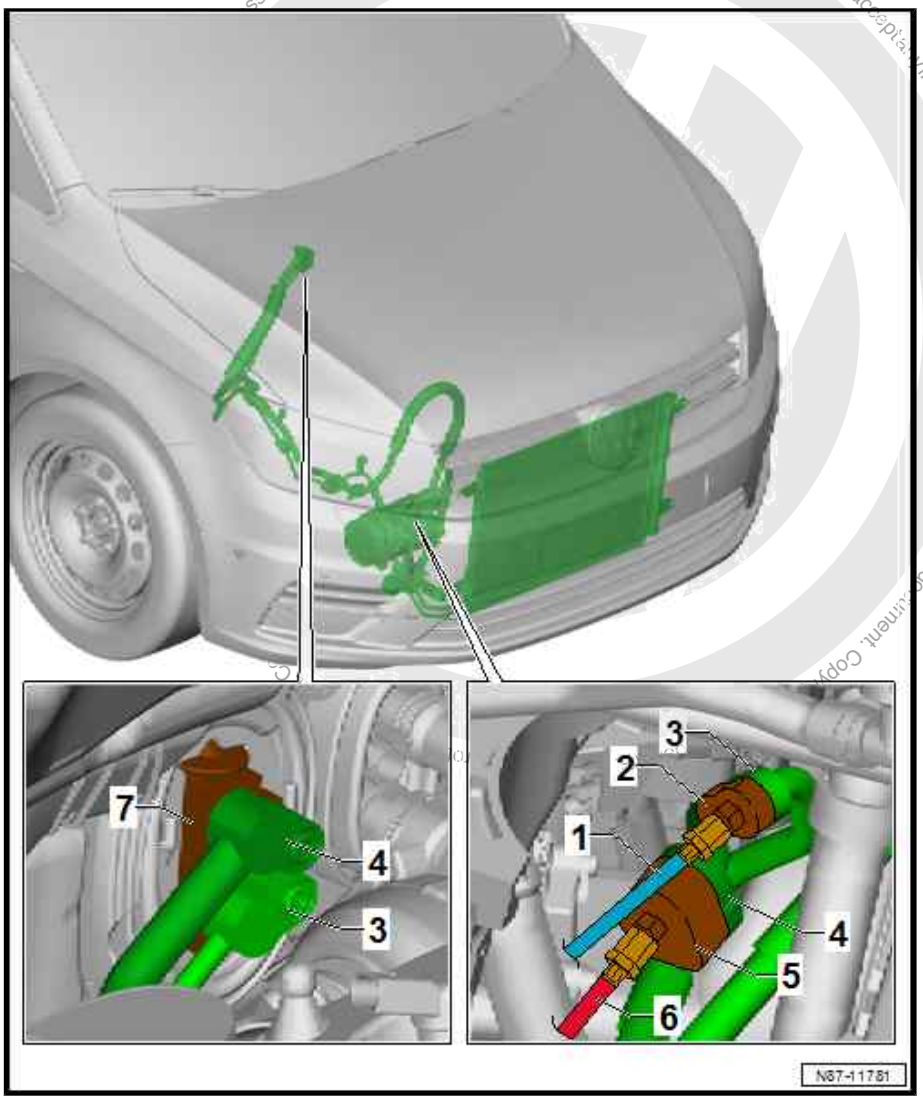

11.5.2 Procedure for setting up and flushing refrigerant circuit

Special tools and workshop equipment required

- ♦ Torque wrench - V.A.G 1410-

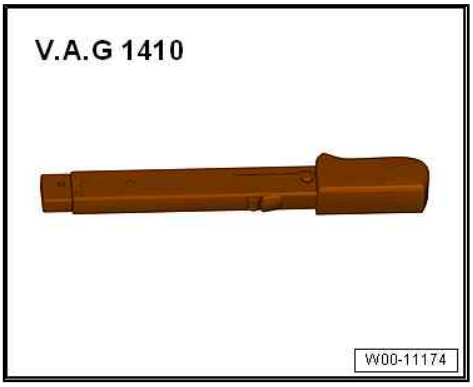

satelettronica

Protected by copyright. Copying for private or commercial purposes, in part or in whole, is not permitted unless authorised by Volkswagen AG. Volkswagen AG does not guarantee or accept any liability with respect to the correctness of information in this document. Copyright by Volkswagen AG.

- Engine bung set - VAS 6122-

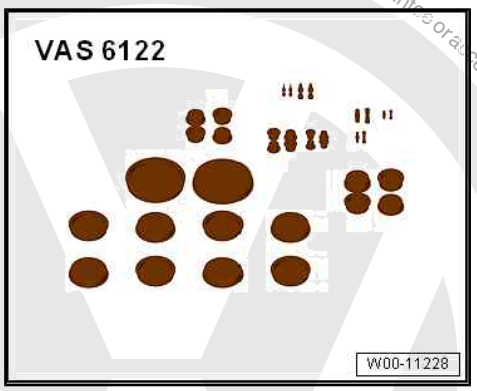

- Adapter set for refrigerant circuit - VAS 6338/1-

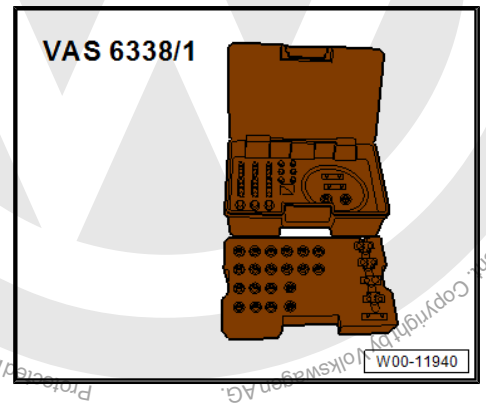

- Air conditioner service station , e.g. air conditioner service station - VAS 6746A-

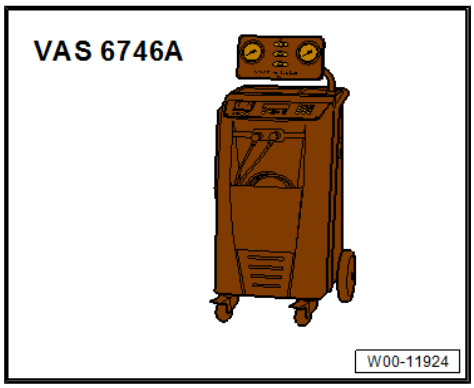

- Drill bit, ∅ 6 mm

Note

- *The following procedure was created for the 2.0 l common rail engine equipped for left-hand drive. The procedure for other engines should be adapted accordingly.*
- *Flushing a contaminated refrigerant circuit is carried out against the direction of normal flow.*
- *To install the individual flushing adapters, the original threaded connections (nuts and bolts) are to be used and tightened to the respective torque.*

satelettronica

Protected by copyright. Copying for private or commercial purposes, in part or in whole, is not permitted unless authorised by Volkswagen AG. Volkswagen AG does not guarantee or assume any liability with respect to the correctness of information in this document. Copyright by Volkswagen AG.

satelettronica

Setting up

Prepare air conditioner service station as follows

Air conditioner service station with integrated flushing device

– Unscrew quick-release fastener -1- on refrigerant hose on high-pressure side (red) -2-.

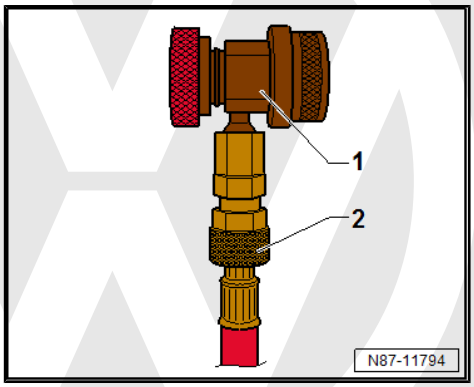

– Unscrew quick-release fastener -1- on refrigerant hose on low-pressure side (blue) -2-.

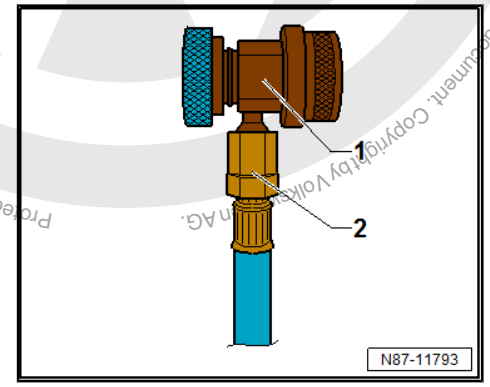

Air conditioner service station with external flushing device

– Unscrew quick-release fastener -1- on refrigerant hose on high-pressure side (red) -2-.

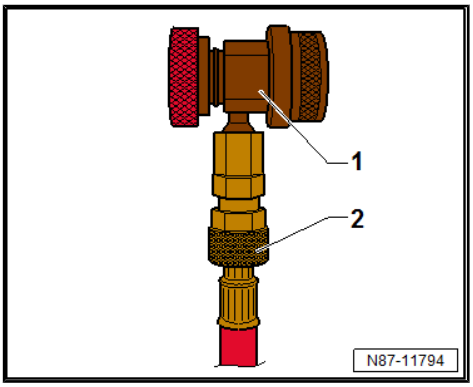

– Connect coolant hose on low-pressure side (blue) -1- from air conditioner service station to filter cartridge -3- of flushing device using quick-release fastener -2-.

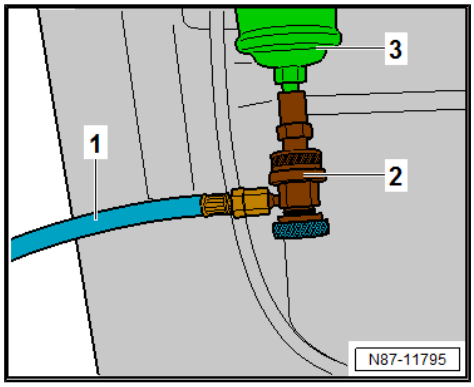

Note

The flushing procedure is carried out with the existing coolant hose (blue) of the external flushing device.

Continuation for all

– Check quantity of refrigerant oil in refrigerant bottle via menu of air conditioner service station .

• There must be at least 7 kg of R134a refrigerant.

– Remove expansion valve ⇒ Heating, air conditioning; Rep. gr. 87 ; Refrigerant circuit; Removing and installing expansion valve .

– Install expansion valve adapter - VAS 6338/18- from adapter set for refrigerant circuit - VAS 6338/1- .

– Connect refrigerant lines to expansion valve adapter - VAS 6338/18- .

Vehicles with Modine condenser

– Remove desiccant bag ⇒ Heating, air conditioning system; Rep. gr. 87 ; Refrigerant circuit; Removing and installing desiccant bag/desiccant cartridge .

– Close receiver on condenser again.

Vehicles with Showa condenser

Note

On vehicles with Showa condenser, the desiccant cartridge is flushed and renewed upon successful completion of the flushing procedure.

Continuation for all

– Remove air conditioner compressor ⇒ Heating, air conditioning; Rep. gr. 87 ; Air conditioner compressor; Removing and installing air conditioner compressor .

Protected by copyright. Copying for private or commercial purposes, in part or in whole, is not permitted unless authorised by Volkswagen AG. Volkswagen AG does not guarantee or accept any liability with respect to the correctness of information in this document. Copyright by Volkswagen AG.
satelettronica

Vehicles with air conditioner compressor 7H0.820.803.F

– Connect refrigerant line of air conditioner compressor on high-pressure side (smaller diameter) -2- to adapter - VAS 6338/2- -1-.

– Connect refrigerant line of air conditioner compressor on low-pressure side (larger diameter) -3- to adapter - VAS 6338/7- -4-.

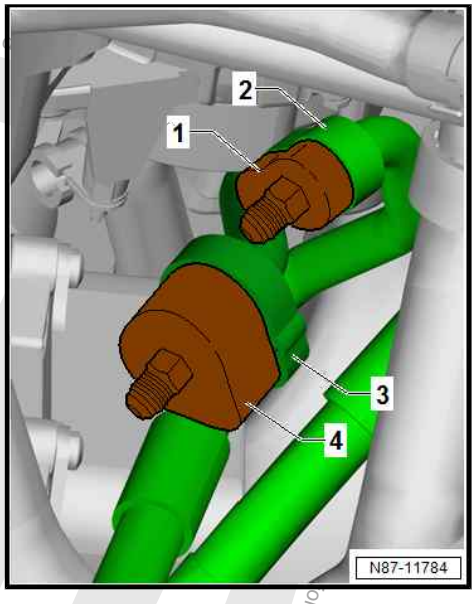

– Connect refrigerant hose on low-pressure side (blue) -1- of air conditioner service station to threaded connection of adapter - VAS 6338/2- -2- of refrigerant line for air conditioner service station on high-pressure side (smaller diameter) -3-.

– Connect refrigerant hose on high-pressure side (red) -6- of air conditioner service station to threaded connection of adapter - VAS 6338/7- -5- of refrigerant line for air conditioner service station on low-pressure side (larger diameter) -4-.

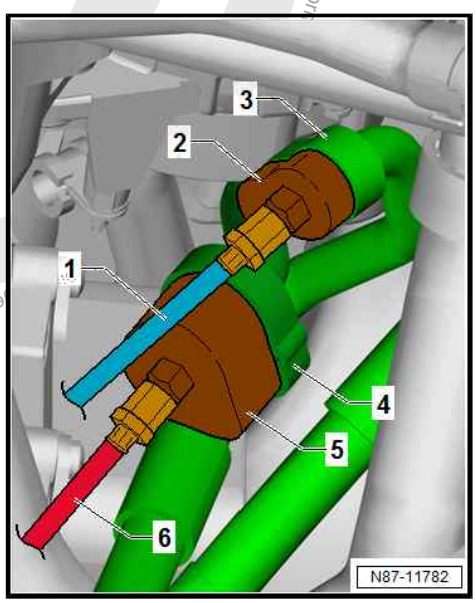

Continuation for all

– Connect refrigerant line of air conditioner compressor on high-pressure side (smaller diameter) -2- to adapter - VAS 6338/3- -1-.

– Connect refrigerant line of air conditioner compressor on low-pressure side (larger diameter) -3- to adapter - VAS 6338/12- -4-.

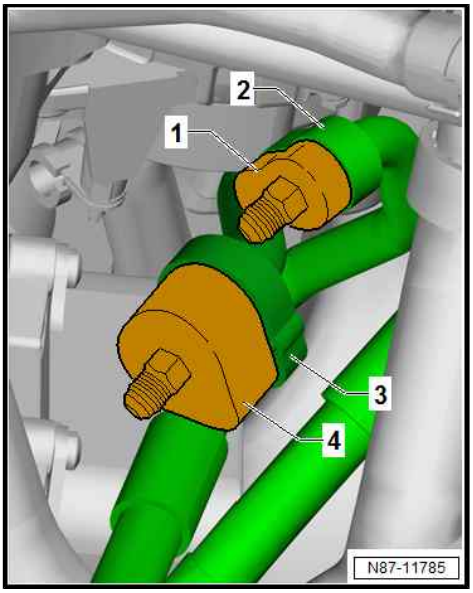

Protected by copyright. Copying for private or commercial purposes, in part or in whole, is not permitted unless authorised by Volkswagen AG. Volkswagen AG.

satelettronica

– Connect refrigerant hose on low-pressure side (blue) -1- of air conditioner service station to threaded connection of adapter - VAS 6338/3- or adapter - VAS 6338/2- -2- of refrigerant line for air conditioner service station on high-pressure side (smaller diameter) -3-.

– Connect refrigerant hose on high-pressure side (red) -6- of air conditioner service station to threaded connection of adapter - VAS 6338/12- or adapter - VAS 6338/7- -5- of refrigerant line for air conditioner service station on low-pressure side (larger diameter) -4-.

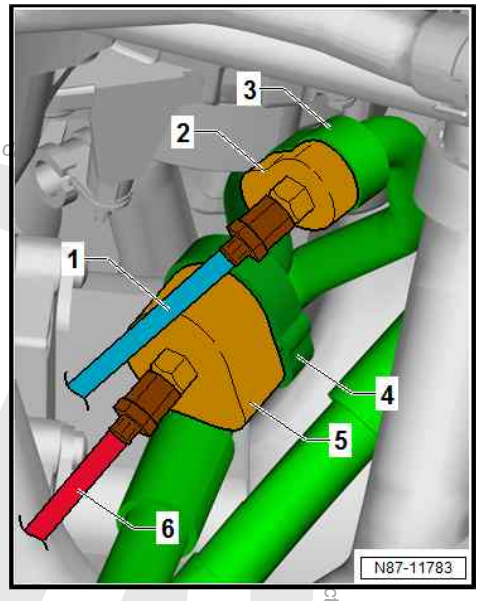

Flush

– Start flushing procedure via menu of air conditioner service station .

Note

If a flushed refrigerant circuit is not reassembled immediately after flushing, the adapters must be left on the connections. These as well as components that are still open must be sealed with clean bungs from engine bung set - VAS 6122- .

On successful completion of flushing procedure, remove all adapters and renew following components during assembly

- Air conditioner compressor
- Expansion valve
- Depending on condenser manufacturer, desiccant bag or desiccant cartridge
- Evacuating and charging valve, high-pressure side and low-pressure side
- Oil seals

– Charge refrigerant circuit ⇒ page 54 .

– Perform leakage test on reattached line connections of refrigerant circuit ⇒ page 57 .

– Bring air conditioning system into operation after charging refrigerant circuit ⇒ Heating, air conditioning; Rep. gr. 87 ; Refrigerant circuit; Bringing air conditioning system into operation after charging refrigerant circuit .

Protected by copyright. Copyright by Volkswagen AG. Volkswagen AG does not guarantee the correctness of information in this document. Copying for private or commercial purposes, in part or in whole, is not permitted unless authorized by Volkswagen AG.

satelettronica

11.6 Procedure for setting up and flushing refrigerant circuit, Crafter ➤2017

⇒ "11.6.1 Connection diagram for flushing circuit, vehicles with one evaporator", page 117

⇒ "11.6.2 Connection diagram for flushing circuit, vehicles with second evaporator", page 118

⇒ "11.6.3 Procedure for setting up and flushing refrigerant circuit, vehicles with one evaporator", page 119

⇒ "11.6.4 Procedure for setting up and flushing refrigerant circuit, vehicles with second evaporator", page 124

11.6.1 Connection diagram for flushing circuit, vehicles with one evaporator

Note

The following connection diagrams were created for the 2.0 l common rail engine equipped for left-hand drive. The connection diagram for other engines should be adapted accordingly.

1 - Drilled out expansion valve

- ❑ Removing and installing ⇒ "Heating, air conditioning; Rep. gr. 87 ; Refrigerant circuit; Removing and installing expansion valve

2 - Refrigerant hose

- ❑ High-pressure side
- ❑ from air conditioner service station

3 - Adapter - VAS 6338/7- or adapter - VAS 6338/12-

- ❑ from adapter set for refrigerant circuit - VAS 6338/50-

4 - Refrigerant line

- ❑ Low-pressure side

5 - Refrigerant line

- ❑ High-pressure side

6 - Adapter - VAS 6338/3-

- ❑ from adapter set for refrigerant circuit - VAS 6338/50-

7 - Refrigerant hose

- ❑ Low-pressure side
- ❑ from air conditioner service station

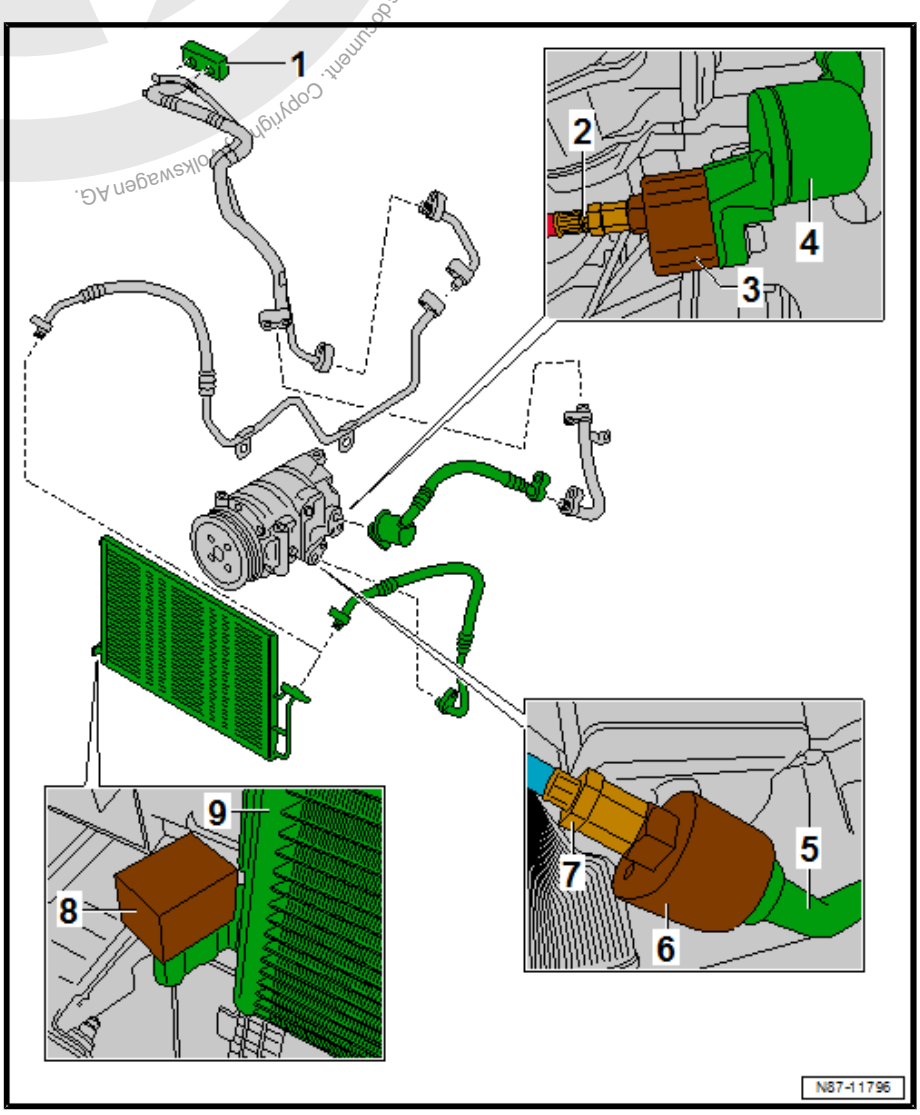

satelettronica

8 - Adapter for connecting desiccant cartridge connection - VAS 6338/68-

9 - Condenser

- ❑ Assembly overview ⇒ Heating, air conditioning system; Rep. gr. 87 ; Refrigerant circuit; Assembly overview - condenser

Protected by copyright. Copying for private or commercial purposes, in part or in whole, is not permitted unless authorised by Volkswagen AG. Volkswagen AG does not guarantee or accept any liability with respect to the co

11.6.2 Connection diagram for flushing circuit, vehicles with second evaporator

Note

The following connection diagrams were created for the 2.0 l common rail engine equipped for left-hand drive. The connection diagram for other engines should be adapted accordingly.

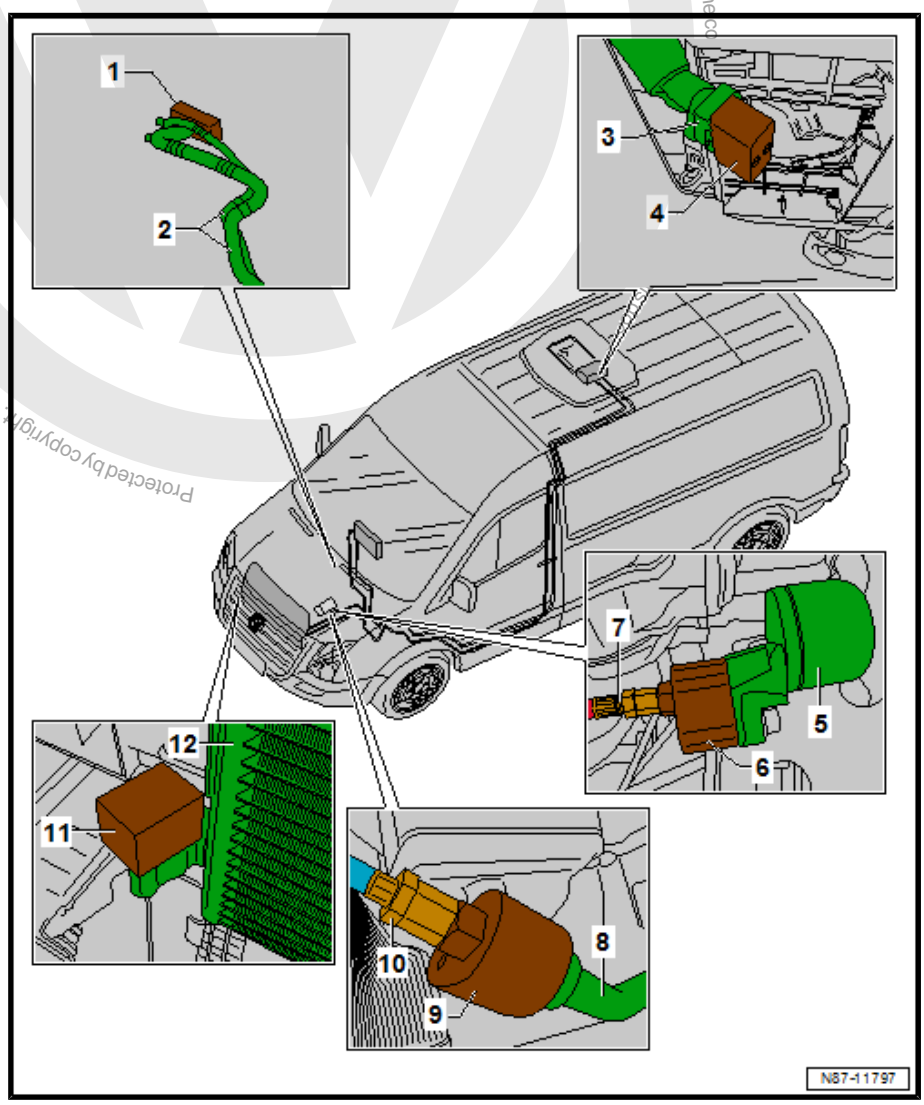

1 - Adapter for connecting expansion valve - VAS 6338/69-

- ❑ For sealing front refrigerant circuit when rear refrigerant circuit is being flushed

2 - Refrigerant lines

- ❑ Qty. 2
- ❑ High-pressure and low-pressure side of front refrigerant circuit

3 - Refrigerant lines

- ❑ Qty. 2
- ❑ High-pressure and low-pressure side of rear refrigerant circuit

4 - Adapter for connecting expansion valve - VAS 6338/69-

- ❑ For sealing rear refrigerant circuit when front refrigerant circuit is being flushed

5 - Refrigerant line

- ❑ Low-pressure side

6 - Adapter - VAS 6338/7- or adapter - VAS 6338/12-

- ❑ from adapter set for refrigerant circuit - VAS 6338/50-

7 - Refrigerant hose

- ❑ High-pressure side
- ❑ from air conditioner service station

8 - Refrigerant line

- ❑ High-pressure side

9 - Adapter - VAS 6338/3-

- ❑ from adapter set for refrigerant circuit - VAS 6338/50-

satelettronica

10 - Refrigerant hose

- ❑ Low-pressure side
- ❑ from air conditioner service station

11 - Adapter for connecting desiccant cartridge connection - VAS 6338/68-

12 - Condenser

- ❑ Assembly overview ⇒ Heating, air conditioning system; Rep. gr. 87 ; Refrigerant circuit; Assembly overview - condenser

11.6.3 Procedure for setting up and flushing refrigerant circuit, vehicles with one evaporator

Special tools and workshop equipment required

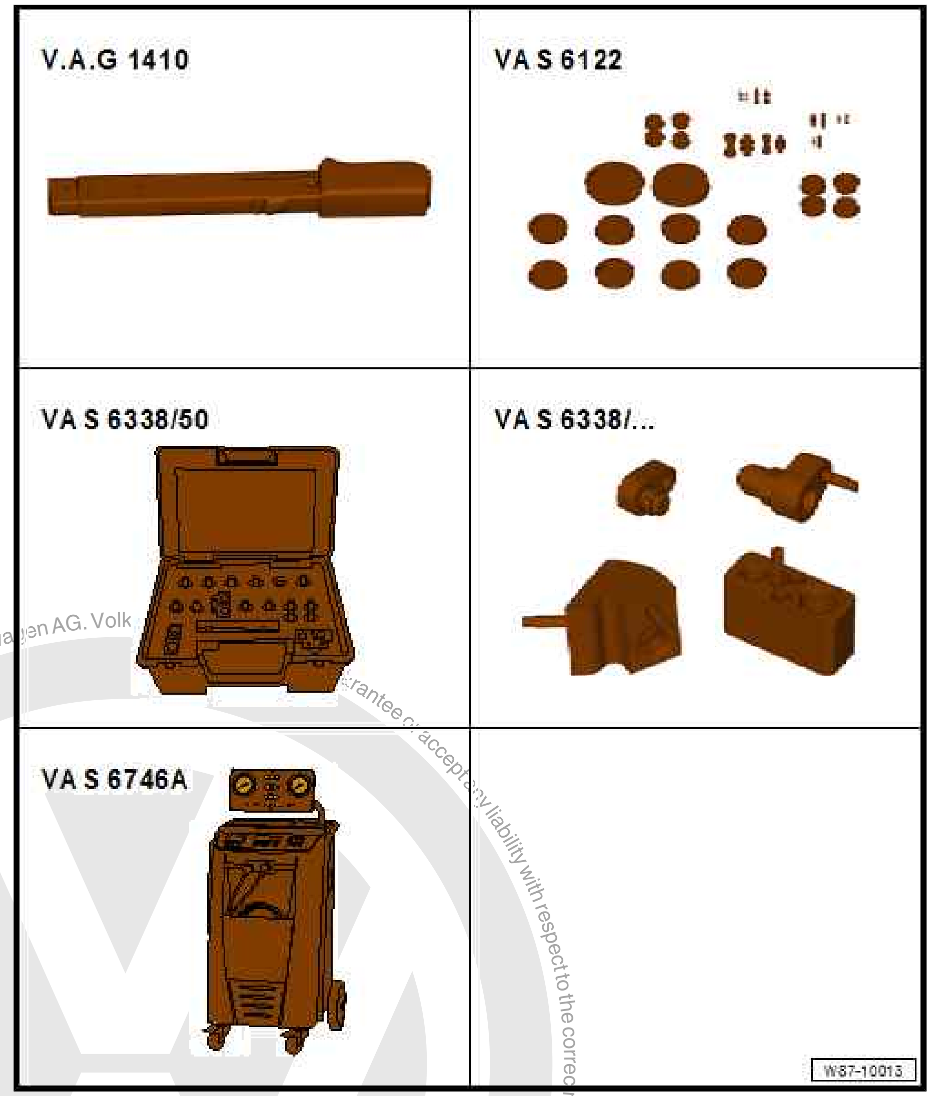

- ♦ Torque wrench - V.A.G 1410-
- ♦ Engine bung set - VAS 6122-
- ♦ Adapter set for refrigerant circuit - VAS 6338/50-
- ♦ Adapter for connecting desiccant cartridge connection - VAS 6338/68-
- ♦ Air conditioner service station , e.g. air conditioner service station - VAS 6746A-

Protected by copyright. Copying for private or commercial purposes, in part or in whole, is not permitted unless authorised by Volkswagen AG. Volkswagen AG does not guarantee or accept any liability with respect to the correctness of information in this document. Copyright by Volkswagen AG.
sateletronica

- Drill bit, ∅ 6 mm

Note

- *The following procedure was created for the 2.0 l common rail engine equipped for left-hand drive. The procedure for other engines should be adapted accordingly.*
- *Flushing a contaminated refrigerant circuit is carried out against the direction of normal flow.*
- *To install the individual flushing adapters, the original threaded connections (nuts and bolts) are to be used and tightened to the respective torque.*

Setting up

– Drain refrigerant circuit ⇒ page 53 .

CAUTION

Risk of freezing injury caused by escaping pressurised refrigerant.

There is a risk of injury to the skin and parts of the body due to freezing.

- **Wear protective gloves.**
- **Wear safety goggles.**
- **Extract refrigerant and open the refrigerant circuit immediately afterwards.**
- **If more than 10 minutes have passed since the refrigerant was extracted, repeat the extraction process before opening the refrigerant circuit. Pressure could build up in the refrigerant circuit from continued evaporation.**

Prepare air conditioner service station as follows

Air conditioner service station with integrated flushing device

– Unscrew quick-release fastener -1- on refrigerant hose on high-pressure side (red) -2-.

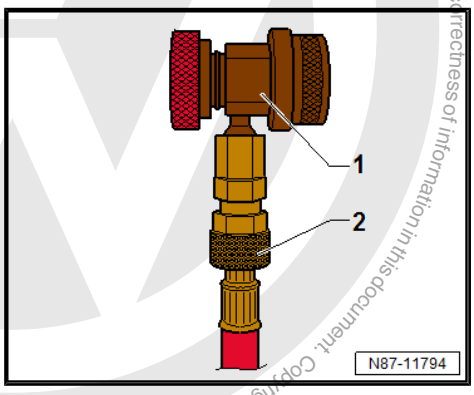

– Unscrew quick-release fastener -1- on refrigerant hose on low-pressure side (blue) -2-.

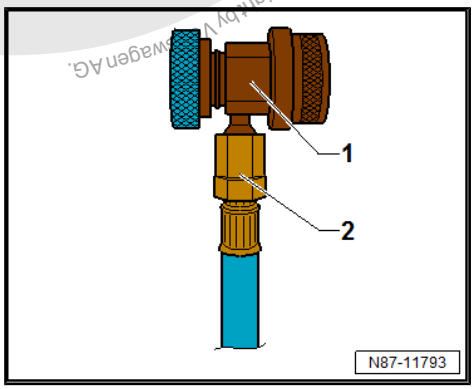

Protected by copyright. Copying for private or commercial purposes, in part or in whole, is not permitted unless authorised by Volkswagen AG. Volkswagen AG does not guarantee or accept any liability with respect to the correctness of information in this document. Copyright by Volkswagen AG.
satelettronica

Air conditioner service station with external flushing device

– Unscrew quick-release fastener -1- on refrigerant hose on high-pressure side (red) -2-.

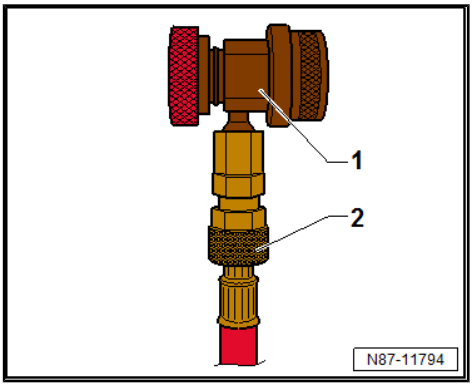

– Connect coolant hose on low-pressure side (blue) -1- from air conditioner service station to filter cartridge -3- of flushing device using quick-release fastener -2-.

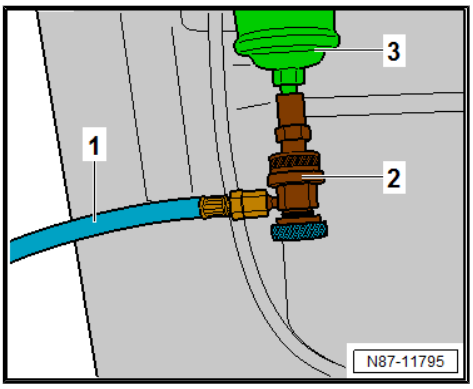

Note

The flushing procedure is carried out with the existing coolant hose (blue) of the external flushing device.

Continuation for all

– Check quantity of refrigerant oil in refrigerant bottle via menu of air conditioner service station .

• There must be at least 7 kg of R134a refrigerant.

– Remove expansion valve ⇒ Heating, air conditioning; Rep. gr. 87 ; Refrigerant circuit; Removing and installing expansion valve .

Note

♦ *When drilling out, ensure that the flow holes -2- and -4- in the expansion valve -1- are located offset to each other.*

♦ *Failure to observe this measure can result in the sealing surface on the expansion valve -1- becoming damaged when drilling, thereby rendering the expansion valve useless for setting up the flushing circuit.*

– Drill out expansion valve -1- as shown using ∅ 6 mm bit -3-.

– Clean drilled out expansion valve -1- of dirt.

– Install drilled out expansion valve -1-.

– Connect refrigerant lines to drilled out expansion valve -1-.

– Remove desiccant cartridge ⇒ Heating, air conditioning system; Rep. gr. 87 ; Refrigerant circuit; Removing and installing desiccant cartridge .

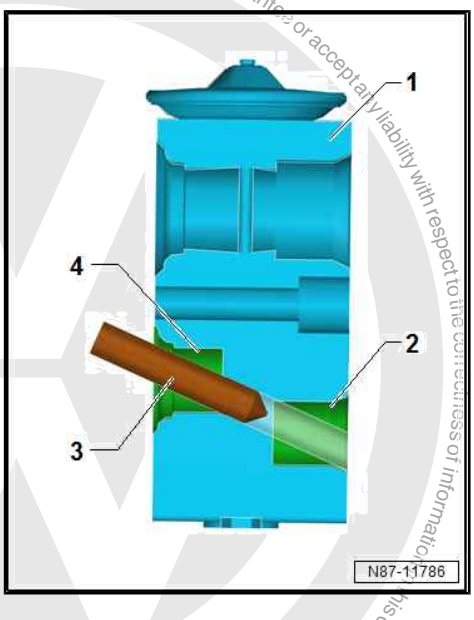

satelettronica
Protected by copyright. Copying for private or commercial purposes, in part or in whole, is not permitted unless authorised by Volkswagen AG. Volkswagen AG does not guarantee or accept any liability with respect to the correctness of information in this document. Copyright by Volkswagen AG.

– Close and secure desiccant cartridge connection on condenser -1- using adapter for connecting desiccant cartridge connection - VAS 6338/68- -2-.

– Remove air conditioner compressor ⇒ Heating, air conditioning; Rep. gr. 87 ; Air conditioner compressor; Removing and installing air conditioner compressor .

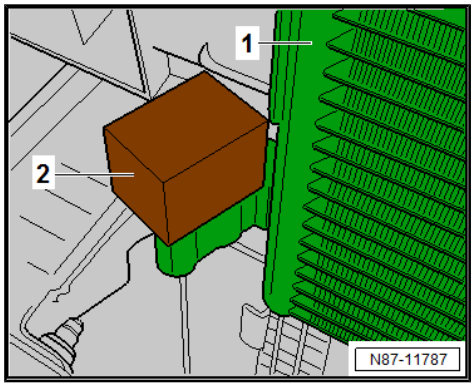

Vehicles with PR numbers 9AS or 9AP

– Connect refrigerant line of air conditioner compressor on high-pressure side (smaller diameter) -1- to adapter - VAS 6338/3- -2-.

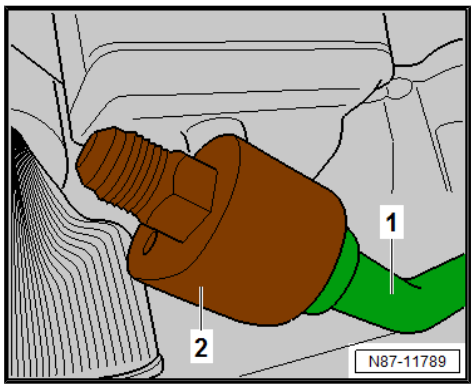

– Connect refrigerant line of air conditioner compressor on low-pressure side (larger diameter) -1- to adapter - VAS 6338/12- -2-.

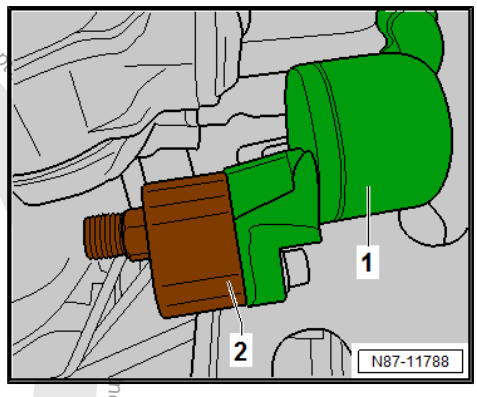

Vehicles with PR number 2AB

– Connect refrigerant line of air conditioner compressor on high-pressure side (smaller diameter) -1- to adapter - VAS 6338/3- -2-.

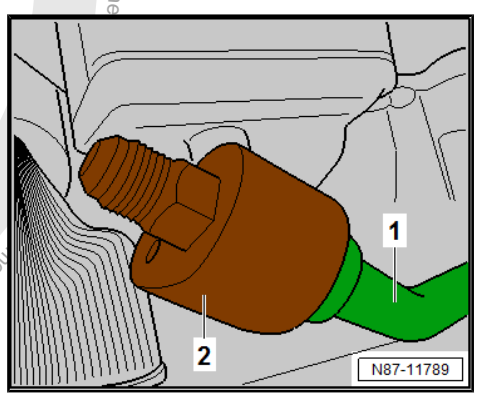

Protected by copyright. Copyright by Volkswagen AG.
Copyright by Volkswagen AG. Volkswagen AG does not guarantee or accept any liability with respect to the correctness of information. Copying for private or commercial purposes, in part or in whole, is not permitted unless authorised by Volkswagen AG.
satelettronica

– Connect refrigerant line of air conditioner compressor on low-pressure side (larger diameter) -1- to adapter - VAS 6338/7- -2-.

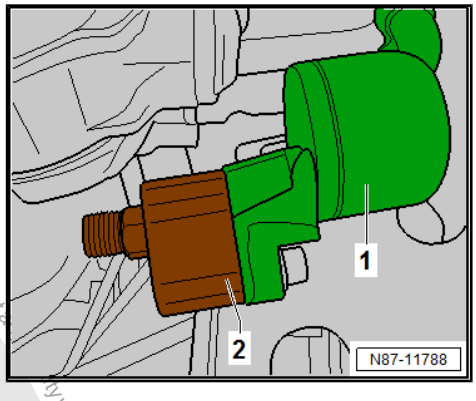

Continued for all vehicles

– Connect refrigerant hose on low-pressure side (blue) -3- of air conditioner service station to threaded connection of adapter - VAS 6338/3- -2- of refrigerant line for air conditioner service station on high-pressure side (smaller diameter) -1-.

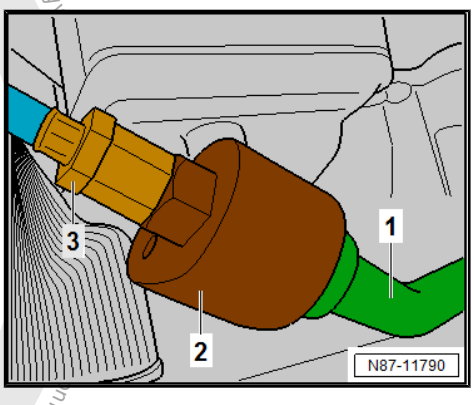

Protected by copyright. Copying for private or commercial purposes, in part or in whole, is not permitted unless authorised by Volkswagen AG. Volkswagen AG does not guarantee or accept any liability with respect to the correctness of information in this document. Copyright by Volkswagen AG.

satelettronica

– Connect refrigerant hose on high-pressure side (red) -3- of air conditioner service station to threaded connection of adapter - VAS 6338/7- or adapter - VAS 6338/12- -2- of refrigerant line for air conditioner service station on low-pressure side (larger diameter) -1-.

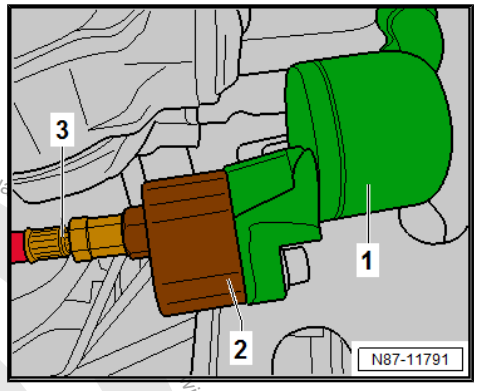

Flush

– Start flushing procedure via menu of air conditioner service station .

Note

If a flushed refrigerant circuit is not reassembled immediately after flushing, the adapters must be left on the connections. These as well as components that are still open must be sealed with clean bungs from engine bung set - VAS 6122- .

On successful completion of flushing procedure, remove all adapters and renew following components during assembly

- Air conditioner compressor
- Expansion valve
- Desiccant cartridge
- Evacuating and charging valve, high-pressure side and low-pressure side
- Oil seals

– Charge refrigerant circuit ⇒ page 54 .

– Perform leakage test on reattached line connections of refrigerant circuit ⇒ page 57 .

– Bring air conditioning system into operation after charging refrigerant circuit ⇒ Heating, air conditioning; Rep. gr. 87 ; Refrigerant circuit; Bringing air conditioning system into operation after charging refrigerant circuit .

Specified torques

- Refrigerant circuit; Assembly overview - expansion valve ⇒ Heating, air conditioning system; Rep. gr. 87 ; Refrigerant circuit; Assembly overview - expansion valve

Component	Torque setting
Bolt securing desiccant cartridge on condenser	⇒ Heating, air conditioning system; Rep. gr. 87 ; Refrigerant circuit; Removing and installing desiccant cartridge

11.6.4 Procedure for setting up and flushing refrigerant circuit, vehicles with second evaporator

Copyright by Volkswagen AG. Volkswagen AG does not guarantee or assume any liability with respect to the correctness of information in this document. Copying or distribution, including excerpts, is not permitted unless authorised by Volkswagen AG.
satelettronica

Special tools and workshop equipment required

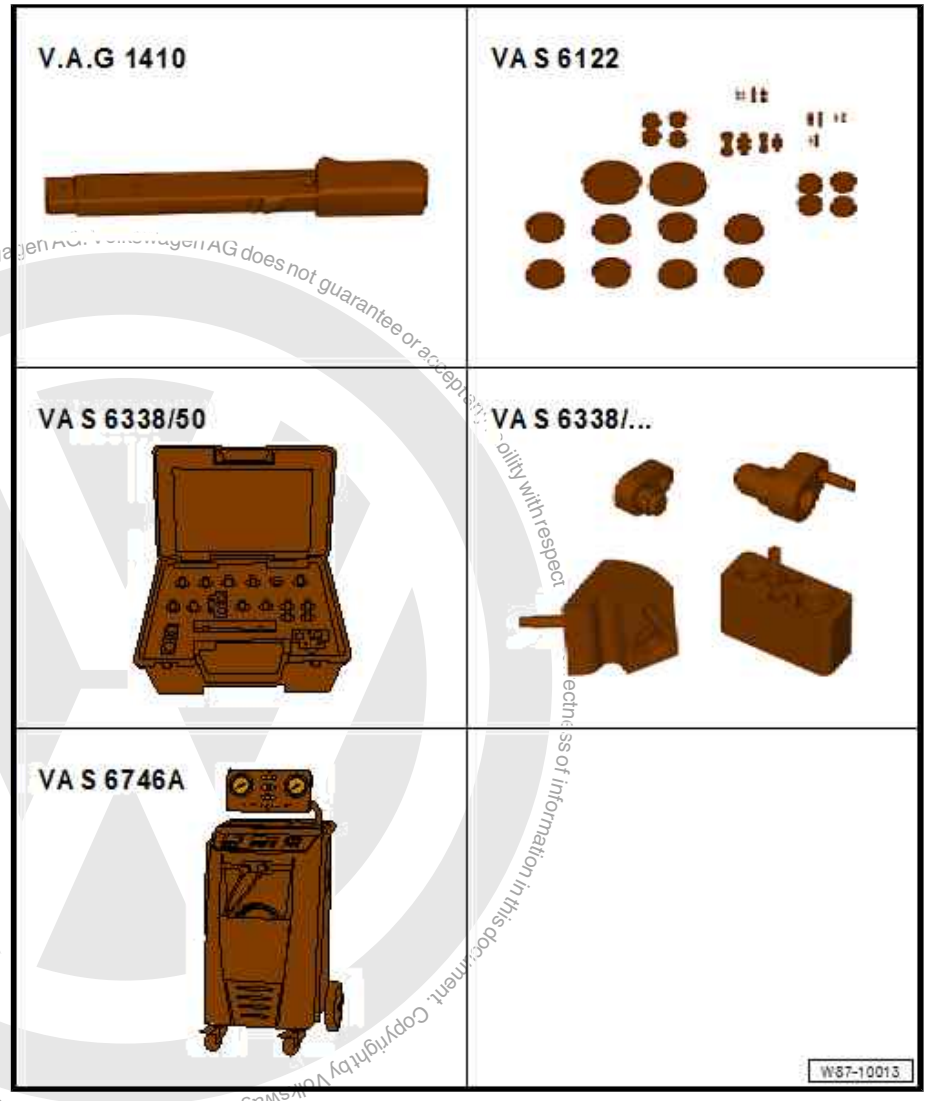

Protected by copyright. Copying for private or commercial purposes, in part or in whole, is not permitted unless authorised by Volkswagen AG. Volkswagen AG does not guarantee or accept any liability with respect to the correctness of information in this document. Copyright by Volkswagen AG.

- Torque wrench - V.A.G 1410-
- Engine bung set - VAS 6122-
- Adapter set for refrigerant circuit - VAS 6338/50-
- Adapter for connecting desiccant cartridge connection - VAS 6338/68-
- Adapter for connecting expansion valve - VAS 6338/69-
- Air conditioner service station , e.g. air conditioner service station - VAS 6746A-
- Drill bit, ∅ 6 mm

satelettronica

Protected by copyright. Copying for private or commercial purposes, in part or in whole, is not permitted unless authorised by Volkswagen AG. Volkswagen AG does not guarantee or accept any liability with respect to the correctness of information in this document. Copyright by Volkswagen AG.

Note

- *If the vehicle has a second evaporator, the rear refrigerant circuit (roof air conditioning system) must be rinsed first.*
- *The following procedure was created for the 2.0 l common rail engine equipped for left-hand drive. The procedure for other engines should be adapted accordingly.*
- *Flushing a contaminated refrigerant circuit is carried out against the direction of normal flow.*
- *To install the individual flushing adapters, the original threaded connections (nuts and bolts) are to be used and tightened to the respective torque.*

Setting up

– Drain refrigerant circuit ⇒ page 53 .

Prepare air conditioner service station as follows

Air conditioner service station with integrated flushing device

– Unscrew quick-release fastener -1- on refrigerant hose on high-pressure side (red) -2-.

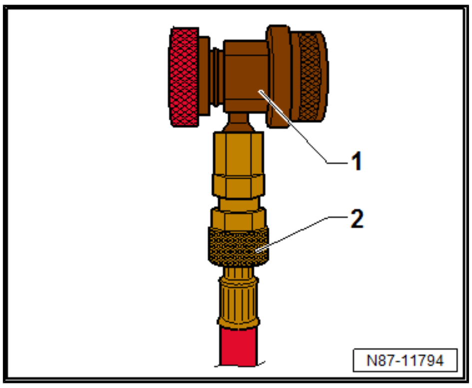

– Unscrew quick-release fastener -1- on refrigerant hose on low-pressure side (blue) -2-.

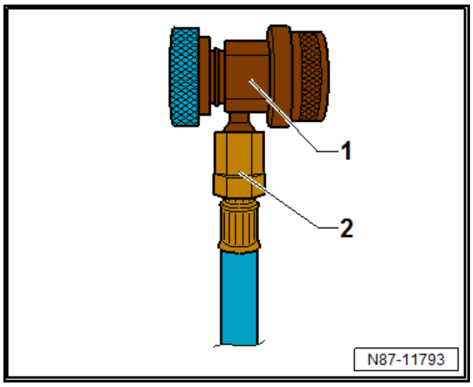

Air conditioner service station with external flushing device

– Unscrew quick-release fastener -1- on refrigerant hose on high-pressure side (red) -2-.

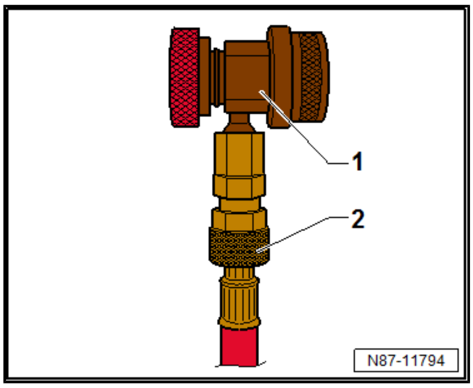

satelettronica

– Connect coolant hose on low-pressure side (blue) -1- from air conditioner service station to filter cartridge -3- of flushing device using quick-release fastener -2-.

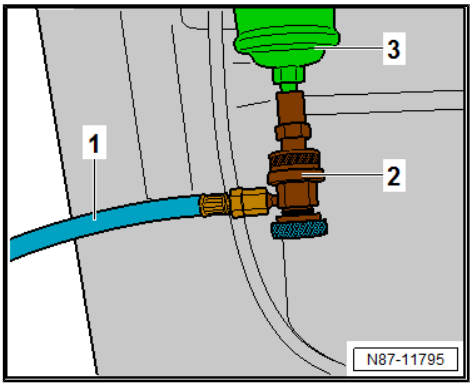

Note

The flushing procedure is carried out with the existing coolant hose (blue) of the external flushing device.

Continuation for all

– Check quantity of refrigerant oil in refrigerant bottle via menu of air conditioner service station .

• There must be at least 7 kg of R134a refrigerant.

– Remove expansion valve with refrigerant circulation solenoid valve - N43- ⇒ Heating, air conditioning system; Rep. gr. 87 ; Refrigerant circuit of roof air conditioning system; Evaporator; Removing and installing expansion valve with refrigerant circulation solenoid valve - N43- .

– Remove expansion valve ⇒ Heating, air conditioning; Rep. gr. 87 ; Refrigerant circuit; Removing and installing expansion valve .

Note

♦ *When drilling out, ensure that the flow holes -2- and -4- in the expansion valve -1- are located offset to each other.*

♦ *Failure to observe this measure can result in the sealing surface on the expansion valve -1- becoming damaged when drilling, thereby rendering the expansion valve useless for setting up the flushing circuit.*

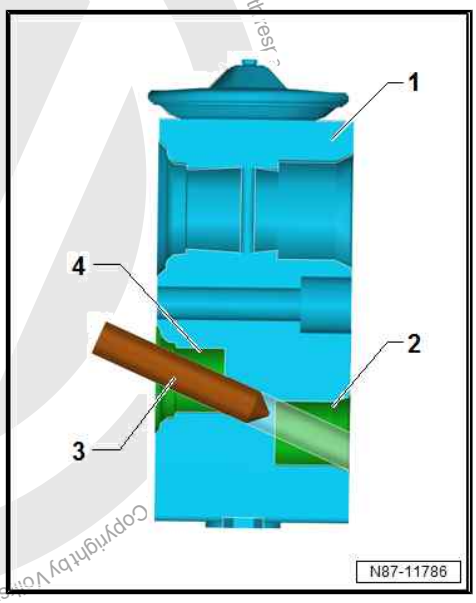

– Drill out expansion valve and expansion valve with refrigerant circulation solenoid valve - N43- -1- as shown using ∅ 6 mm drill bit -3-.

– Clean drilled out expansion valve and drilled out expansion valve with refrigerant circulation solenoid valve - N43- -1- of dirt.

– Install drilled out expansion valve and drilled out expansion valve with refrigerant circulation solenoid valve - N43- -1-.

– Connect refrigerant lines to drilled out expansion valve with refrigerant circulation solenoid valve - N43- -1-.

– Remove expansion valve ⇒ Heating, air conditioning; Rep. gr. 87 ; Refrigerant circuit; Removing and installing expansion valve .

– Attach and secure refrigerant lines of first refrigerant circuit to adapter for connecting expansion valve - VAS 6338/69- .

– Remove desiccant cartridge ⇒ Heating, air conditioning system; Rep. gr. 87 ; Refrigerant circuit; Removing and installing desiccant cartridge .

Copyright by Volkswagen AG. Volkswagen AG does not guarantee or accept any liability with respect to the correctness and completeness of this document. Reproduction, in part or in whole, is not permitted without the express consent of Volkswagen AG.
Copyright by Volkswagen AG
satelettronica

– Close and secure desiccant cartridge connection on condenser -1- using adapter for connecting desiccant cartridge connection - VAS 6338/68- -2-.

– Remove air conditioner compressor ⇒ Heating, air conditioning; Rep. gr. 87 ; Air conditioner compressor; Removing and installing air conditioner compressor .

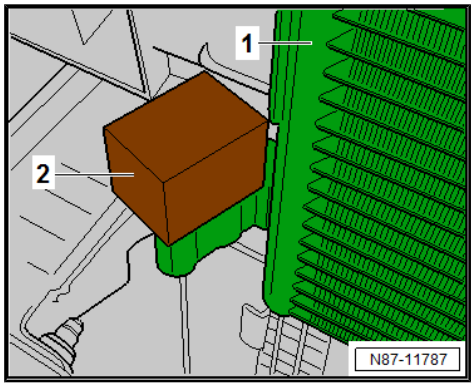

Vehicles with PR numbers 9AS or 9AP

– Connect refrigerant line of air conditioner compressor on high-pressure side (smaller diameter) -1- to adapter - VAS 6338/3- -2-.

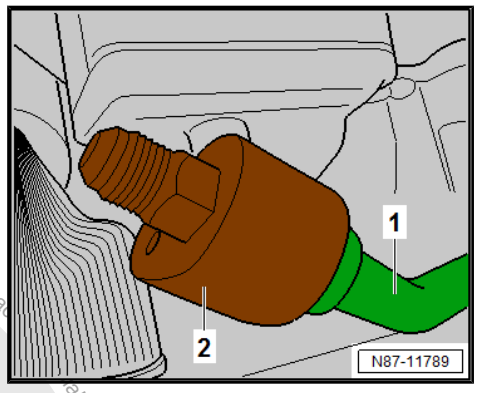

– Connect refrigerant line of air conditioner compressor on low-pressure side (larger diameter) -1- to adapter - VAS 6338/12- -2-.

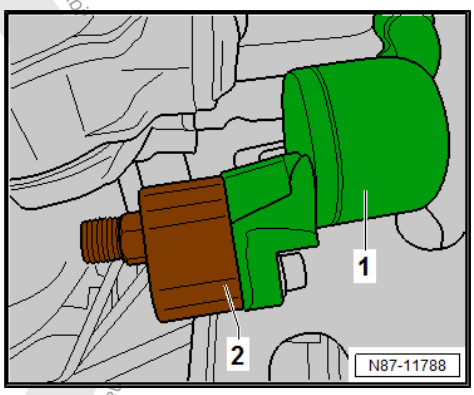

Vehicles with PR number 2AB

– Connect refrigerant line of air conditioner compressor on high-pressure side (smaller diameter) -1- to adapter - VAS 6338/3- -2-.

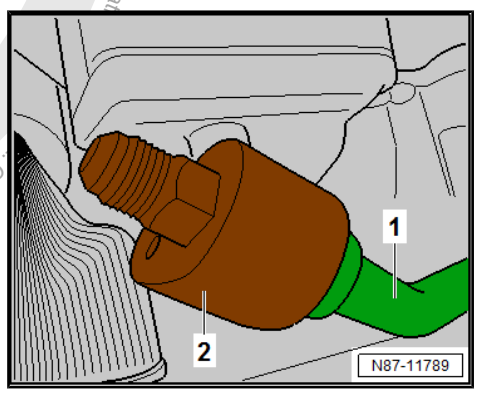

Protected by copyright. Copying for private or commercial purposes, in part or in whole, is not permitted unless authorised by Volkswagen AG. Volkswagen AG does not guarantee or assume liability for the accuracy, completeness and timeliness of the information. Copyright by Volkswagen AG.
satelettronica

– Connect refrigerant line of air conditioner compressor on low-pressure side (larger diameter) -1- to adapter - VAS 6338/7- -2-.

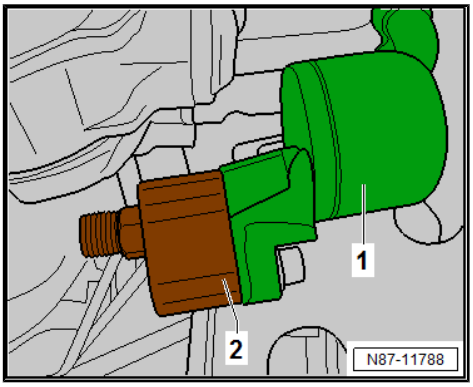

Continued for all vehicles

– Connect refrigerant hose on low-pressure side (blue) -3- of air conditioner service station to threaded connection of adapter - VAS 6338/3- -2- of refrigerant line for air conditioner service station on high-pressure side (smaller diameter) -1-.

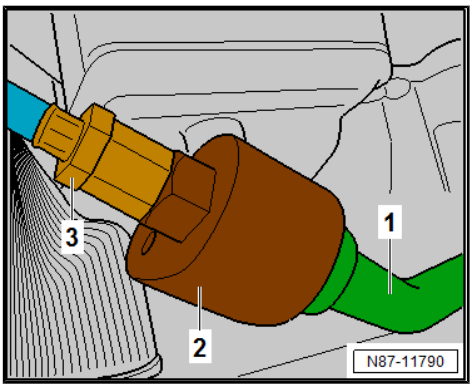

– Connect refrigerant hose on high-pressure side (red) -3- of air conditioner service station to threaded connection of adapter - VAS 6338/7- or adapter - VAS 6338/12- -2- of refrigerant line for air conditioner service station on low-pressure side (larger diameter) -1-.

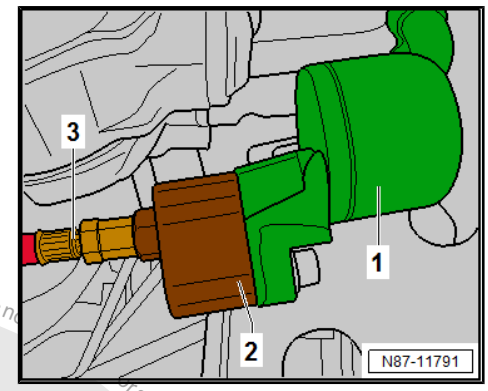

Flush

– Start first flushing sequence via menu of air conditioner service station .

Note

If a flushed refrigerant circuit is not reassembled immediately after flushing, the adapters must be left on the connections. These as well as components that are still open must be sealed with clean bungs from engine bung set - VAS 6122- .

– Remove adapter for connecting expansion valve - VAS 6338/69- .

– Connect refrigerant lines to drilled out expansion valve of first refrigerant circuit.

– Remove drilled out expansion valve with refrigerant circulation solenoid valve - N43- ⇒ Heating, air conditioning system; Rep. gr. 87 ; Refrigerant circuit of roof air conditioning system; Evaporator; Removing and installing expansion valve with refrigerant circulation solenoid valve - N43- .

Protected by copyright. Copying for private or commercial purposes, in part or in whole, is not permitted unless authorised by Volkswagen AG. Volkswagen AG does not accept any liability with respect to the correctness of information in this document. Copyright by Volkswagen AG.

satelettronica

– Attach and secure refrigerant lines -1- to adapter for connecting expansion valve - VAS 6338/69- -2-.

– Start second flushing sequence via menu of air conditioner service station .

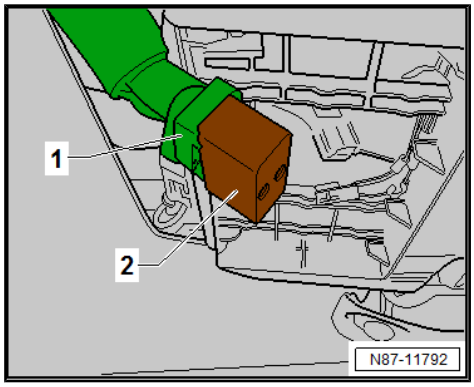

Note

If a flushed refrigerant circuit is not reassembled immediately after flushing, the adapters must be left on the connections. These as well as components that are still open must be sealed with clean bungs from engine bung set - VAS 6122- .

On successful completion of flushing procedure, remove all adapters and renew following components during assembly

- Air conditioner compressor
- Expansion valve
- Expansion valve with refrigerant circulation solenoid valve - N43-
- Desiccant cartridge
- Evacuating and charging valve, high-pressure side and low-pressure side
- Oil seals

– Charge refrigerant circuit ⇒ page 54 .

– Perform leakage test on reattached line connections of refrigerant circuit ⇒ page 57 .

– Bring air conditioning system into operation after charging refrigerant circuit ⇒ Heating, air conditioning; Rep. gr. 87 ; Refrigerant circuit; Bringing air conditioning system into operation after charging refrigerant circuit .

Specified torques

- Refrigerant circuit; Assembly overview - expansion valve ⇒ Heating, air conditioning system; Rep. gr. 87 ; Refrigerant circuit; Assembly overview - expansion valve

Component	Torque setting
Bolt securing desiccant cartridge on condenser	⇒ Heating, air conditioning system; Rep. gr. 87 ; Refrigerant circuit; Removing and installing desiccant cartridge
Bolts securing expansion valve on refrigerant circulation solenoid valve - N43-	⇒ Heating, air conditioning system; Rep. gr. 87 ; Refrigerant circuit of roof air conditioning system; Evaporator; Removing and installing expansion valve with refrigerant circulation solenoid valve - N43-

11.7 Procedure for setting up and flushing refrigerant circuit, Crafter 2017 ► or MAN TGE ►, Crafter Grand California ►

Note

If the vehicle has a second evaporator, the rear refrigerant circuit (roof air conditioning system) must be rinsed first *⇒ page 136* *.*

satelettronica

⇒ "11.7.1 Connection diagram for flushing circuit, vehicles with one evaporator", page 131

⇒ "11.7.2 Connection diagram for flushing circuit, vehicles with second evaporator", page 132

⇒ "11.7.3 Procedure for setting up and flushing refrigerant circuit, vehicles with one evaporator", page 133

⇒ "11.7.4 Procedure for setting up and flushing refrigerant circuit, vehicles with second evaporator", page 136

11.7.1 Connection diagram for flushing circuit, vehicles with one evaporator

Note

The following connection diagrams were created for the 2.0 l common rail engine equipped for left-hand drive. The connection diagram for other engines should be adapted accordingly.

1 - Refrigerant line
- ❑ Low-pressure side

2 - Refrigerant line
- ❑ High-pressure side

3 - Expansion valve adapter - VAS 6338/38-

4 - Adapter for refrigerant circuit on low-pressure side - air conditioner service station - VAS 6338/12-
- ❑ from adapter set for refrigerant circuit - VAS 6338/50-

5 - Refrigerant hose
- ❑ High-pressure side
- ❑ from air conditioner service station

6 - Refrigerant hose
- ❑ Low-pressure side
- ❑ from air conditioner service station

7 - Adapter for refrigerant circuit on high-pressure side - air conditioner service station - VAS 6338/3-
- ❑ from adapter set for refrigerant circuit - VAS 6338/50-

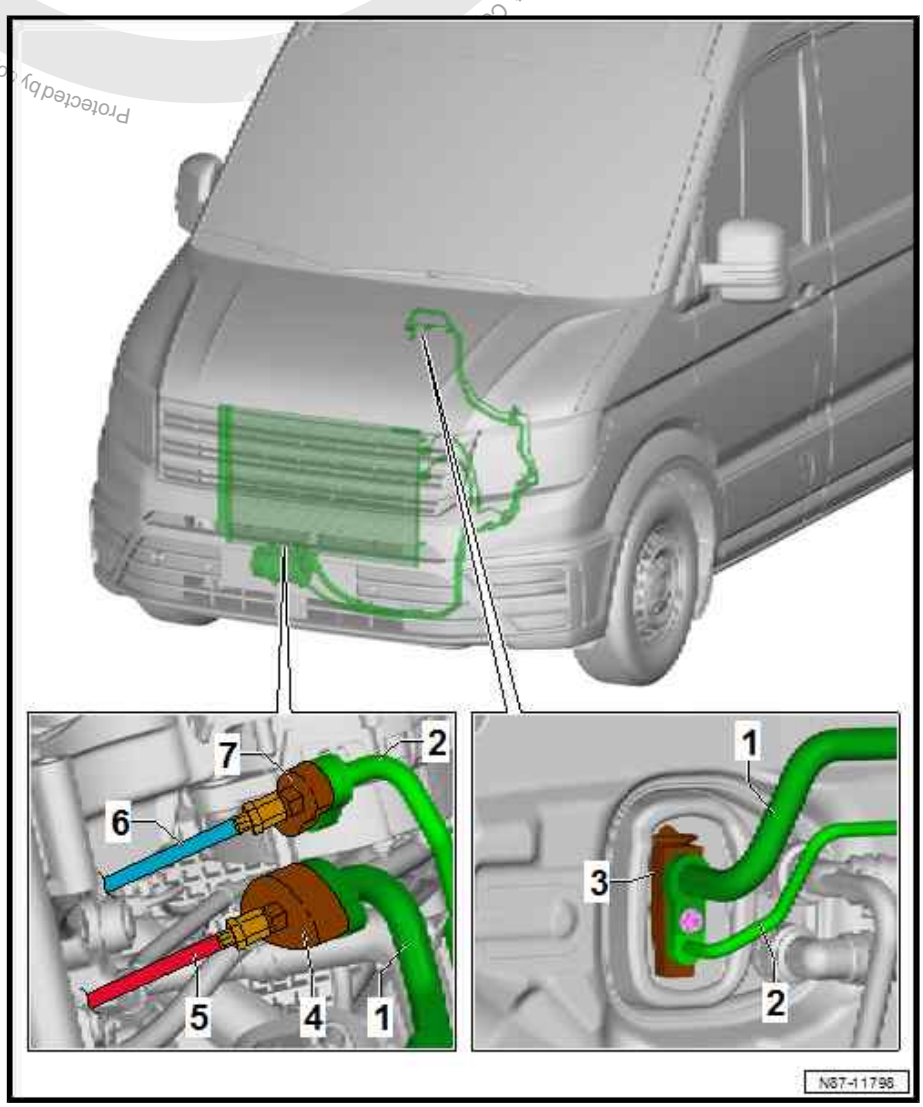

Protected by copyright. Copying for private or commercial purposes, in part or in whole, is not permitted unless authorised by Volkswagen AG. Volkswagen AG does not guarantee or accept any liability with respect to the correctness of information in this document.
satelettronica

11.7.2 Connection diagram for flushing circuit, vehicles with second evaporator

satelettronica

Note

The following connection diagrams were created for the 2.0 l common rail engine equipped for left-hand drive. The connection diagram for other engines should be adapted accordingly.

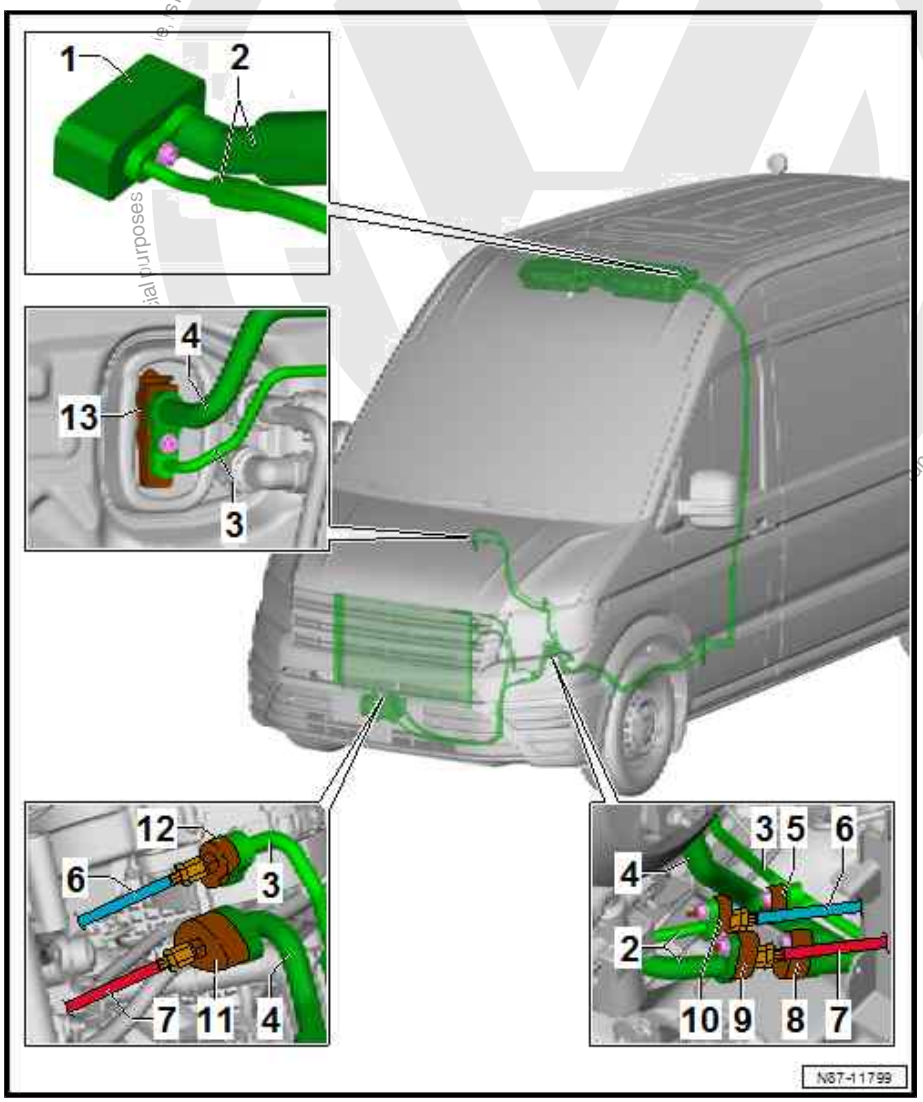

1 - Drilled out expansion valve

- ❑ Removing and installing ⇒ Heating, air conditioning; Rep. gr. 87 ; Refrigerant circuit; Removing and installing expansion valve

2 - Refrigerant lines

- ❑ Qty. 2
- ❑ High-pressure and low-pressure side of rear refrigerant circuit

3 - Refrigerant line

- ❑ High-pressure side

4 - Refrigerant line

- ❑ Low-pressure side

5 - Adapter for connecting refrigerant circuit on high-pressure side - VAS 6338/63-

- ❑ Only on vehicles with second evaporator
- ❑ For connecting front refrigerant circuit on high-pressure side when this is to be flushed on vehicles with second evaporator

6 - Refrigerant hose

- ❑ Low-pressure side
- ❑ from air conditioner service station

7 - Refrigerant hose

- ❑ High-pressure side
- ❑ from air conditioner service station

8 - Adapter for connecting refrigerant circuit on low-pressure side - VAS 6338/5-

- ❑ Only on vehicles with second evaporator
- ❑ For connecting front refrigerant circuit on low-pressure side when this is to be flushed

9 - Adapter for refrigerant circuit on low-pressure side - air conditioner service station - VAS 6338/3-

- ❑ from adapter set for refrigerant circuit - VAS 6338/50-

10 - Adapter for refrigerant circuit on high-pressure side - air conditioner service station, low-pressure side - VAS 6338/60-

11 - Adapter for refrigerant circuit on low-pressure side - air conditioner service station - VAS 6338/12-

- ❑ from adapter set for refrigerant circuit - VAS 6338/50-

12 - Adapter for refrigerant circuit on high-pressure side - air conditioner service station - VAS 6338/3-

- ❑ from adapter set for refrigerant circuit - VAS 6338/50-

13 - Expansion valve adapter - VAS 6338/38-

Protected by copyright. Copying for private or commercial purposes, in part or in whole, is not permitted unless authorised by Volkswagen AG. Volkswagen AG does not guarantee or accept any liability with respect to the correctness of information.

11.7.3 Procedure for setting up and flushing refrigerant circuit, vehicles with one evaporator

Special tools and workshop equipment required

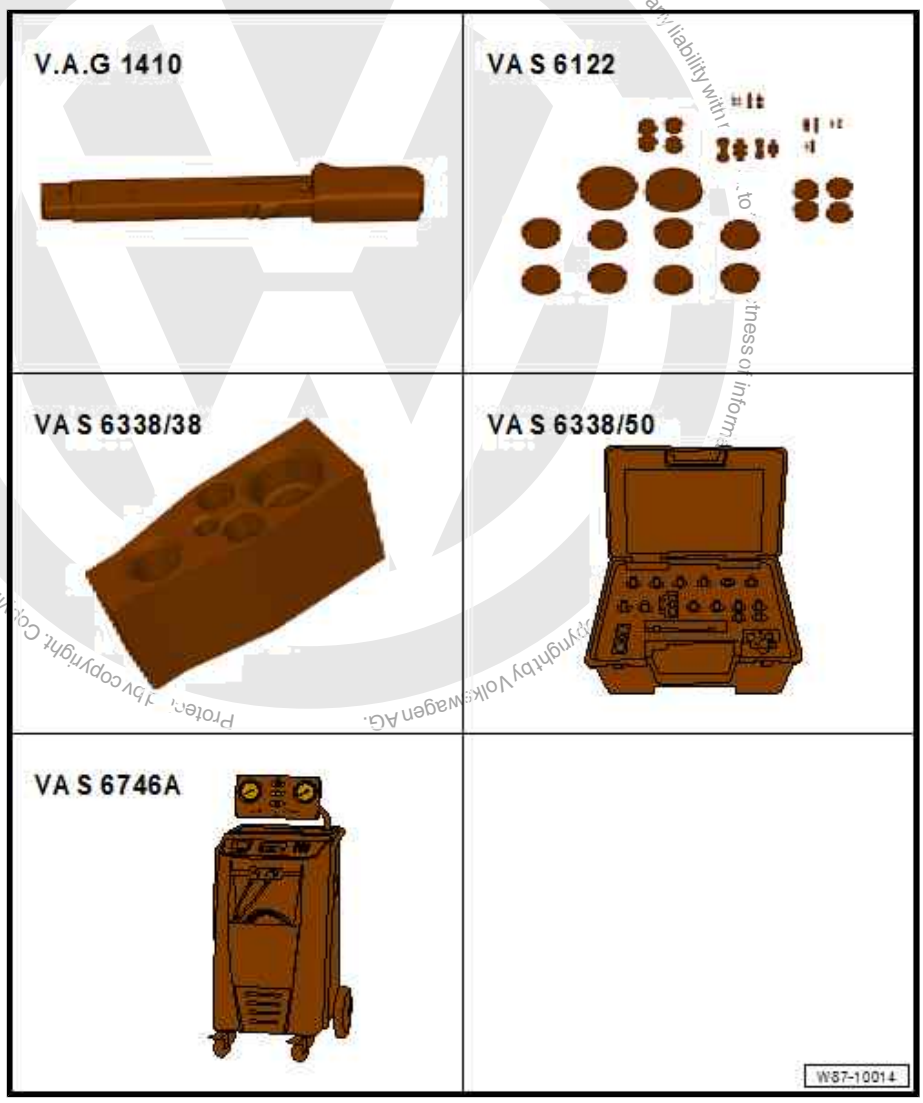

- Torque wrench - V.A.G 1410-
- Engine bung set - VAS 6122-
- Expansion valve adapter - VAS 6338/38-
- Adapter set for refrigerant circuit - VAS 6338/50-
- Air conditioner service station , e.g. air conditioner service station - VAS 6746A-

satelettronica

Note

- *The following procedure was created for the 2.0 l common rail engine equipped for left-hand drive. The procedure for other engines should be adapted accordingly.*
- *Flushing a contaminated refrigerant circuit is carried out against the direction of normal flow.*
- *To install the individual flushing adapters, the original threaded connections (nuts and bolts) are to be used and tightened to the respective torque.*

Setting up

Prepare air conditioner service station as follows

Air conditioner service station with integrated flushing device

– Unscrew quick-release fastener -1- on refrigerant hose on high-pressure side (red) -2-.

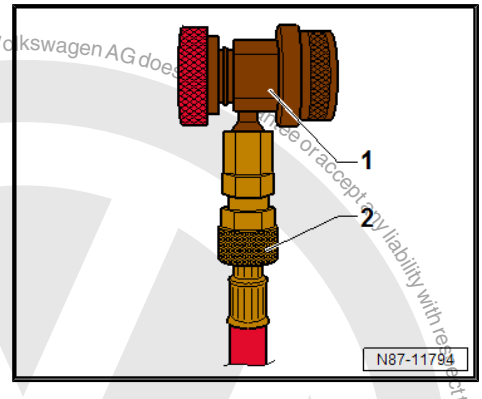

– Unscrew quick-release fastener -1- on refrigerant hose on low-pressure side (blue) -2-.

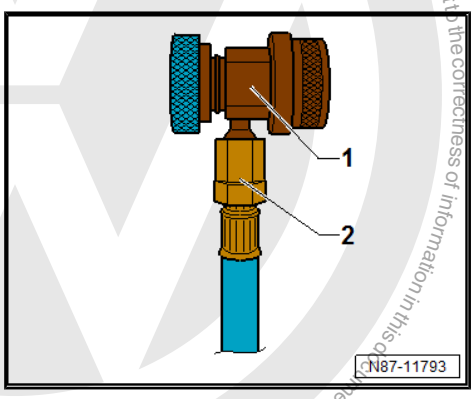

Air conditioner service station with external flushing device

– Unscrew quick-release fastener -1- on refrigerant hose on high-pressure side (red) -2-.

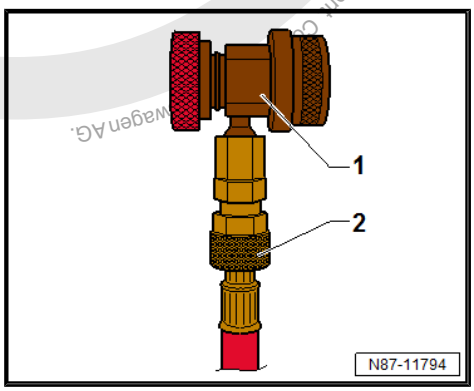

Protected by copyright. Copying for private or commercial purposes, in part or in whole, is not permitted unless authorised by Volkswagen AG. Volkswagen AG does not guarantee or accept any liability with respect to the correctness of information in this document. Copyright by Volkswagen AG.

satelettronica

– Connect coolant hose on low-pressure side (blue) -1- from air conditioner service station to filter cartridge -3- of flushing device using quick-release fastener -2-.

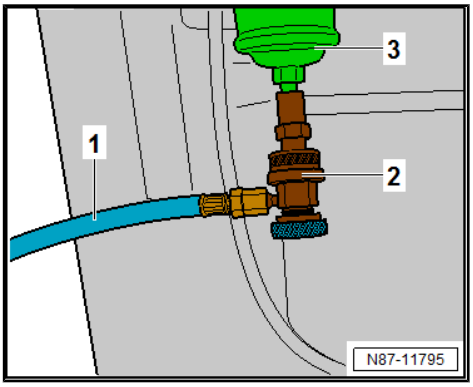

Note

The flushing procedure is carried out with the existing coolant hose (blue) of the external flushing device.

Continuation for all

– Check quantity of refrigerant oil in refrigerant bottle via menu of air conditioner service station .

• There must be at least 7 kg of R134a refrigerant.

– Remove expansion valve ⇒ Heating, air conditioning; Rep. gr. 87 ; Refrigerant circuit; Removing and installing expansion valve .

– Install expansion valve adapter - VAS 6338/38- .

– Connect refrigerant lines to expansion valve adapter - VAS 6338/38- .

– Remove desiccant bag ⇒ Heating, air conditioning system; Rep. gr. 87 ; Refrigerant circuit; Removing and installing desiccant bag/desiccant cartridge .

– Close receiver on condenser again.

– Remove air conditioner compressor ⇒ Heating, air conditioning; Rep. gr. 87 ; Air conditioner compressor; Removing and installing air conditioner compressor .

– Connect refrigerant line of air conditioner compressor on high-pressure side (smaller diameter) -2- to adapter - VAS 6338/3--1-.

– Connect refrigerant line of air conditioner compressor on low-pressure side (larger diameter) -3- to adapter - VAS 6338/12--4-.

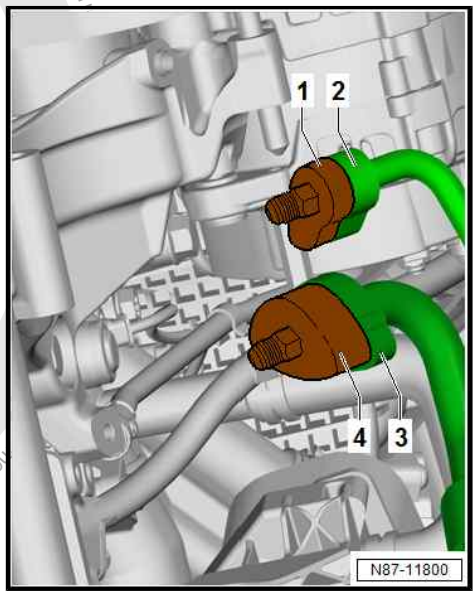

Protected by copyright. Copying for private or commercial purposes, in part or in whole, is not permitted unless authorised by Volkswagen AG. Volkswagen AG does not guarantee or accept any liability with respect to the content. Copyright by Volkswagen AG.
satelettronica

– Connect refrigerant hose on low-pressure side (blue) -1- of air conditioner service station to threaded connection of adapter - VAS 6338/3- -2- of refrigerant line for air conditioner service station on high-pressure side (smaller diameter) -3-.

– Connect refrigerant hose on high-pressure side (red) -6- of air conditioner service station to threaded connection of adapter - VAS 6338/12- -5- of refrigerant line for air conditioner service station on low-pressure side (larger diameter) -4-.

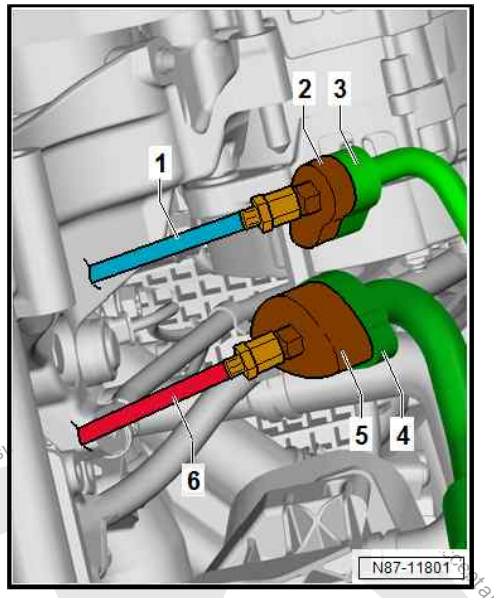

Flush

– Start flushing procedure via menu of air conditioner service station .

Note

If a flushed refrigerant circuit is not reassembled immediately after flushing, the adapters must be left on the connections. These as well as components that are still open must be sealed with clean bungs from engine bung set - VAS 6122- .

On successful completion of flushing procedure, remove all adapters and renew following components during assembly

- ♦ Air conditioner compressor
- ♦ Expansion valve
- ♦ Desiccant bag
- ♦ Evacuating and charging valve, high-pressure side and low-pressure side
- ♦ Oil seals

– Charge refrigerant circuit ⇒ page 54 .

– Perform leakage test on reattached line connections of refrigerant circuit ⇒ page 57 .

– Bring air conditioning system into operation after charging refrigerant circuit ⇒ Heating, air conditioning; Rep. gr. 87 ; Refrigerant circuit; Bringing air conditioning system into operation after charging refrigerant circuit .

Specified torques

- ♦ Refrigerant circuit; Assembly overview - refrigerant lines ⇒ Heating, air conditioning; Rep. gr. 87 ; Refrigerant circuit; Assembly overview - refrigerant lines
- ♦ Air conditioner compressor; Assembly overview - drive unit for air conditioner compressor ⇒ Heating, air conditioning; Rep. gr. 87 ; Air conditioner compressor; Assembly overview - drive unit for air conditioner compressor
- ♦ Front heater and air conditioning unit; Assembly overview - evaporator housing ⇒ Heating, air conditioning; Rep. gr. 87 ; Front heater and air conditioning unit; Assembly overview - evaporator housing

11.7.4 Procedure for setting up and flushing refrigerant circuit, vehicles with second evaporator

Protected by copyright. Copyright by Volkswagen AG.
Copying for private or commercial purposes, in part or in whole, is not permitted unless authorised by Volkswagen AG. Volkswagen AG does not guarantee or accept any liability with respect to the correctness of information in this document.
satelettronica

Special tools and workshop equipment required

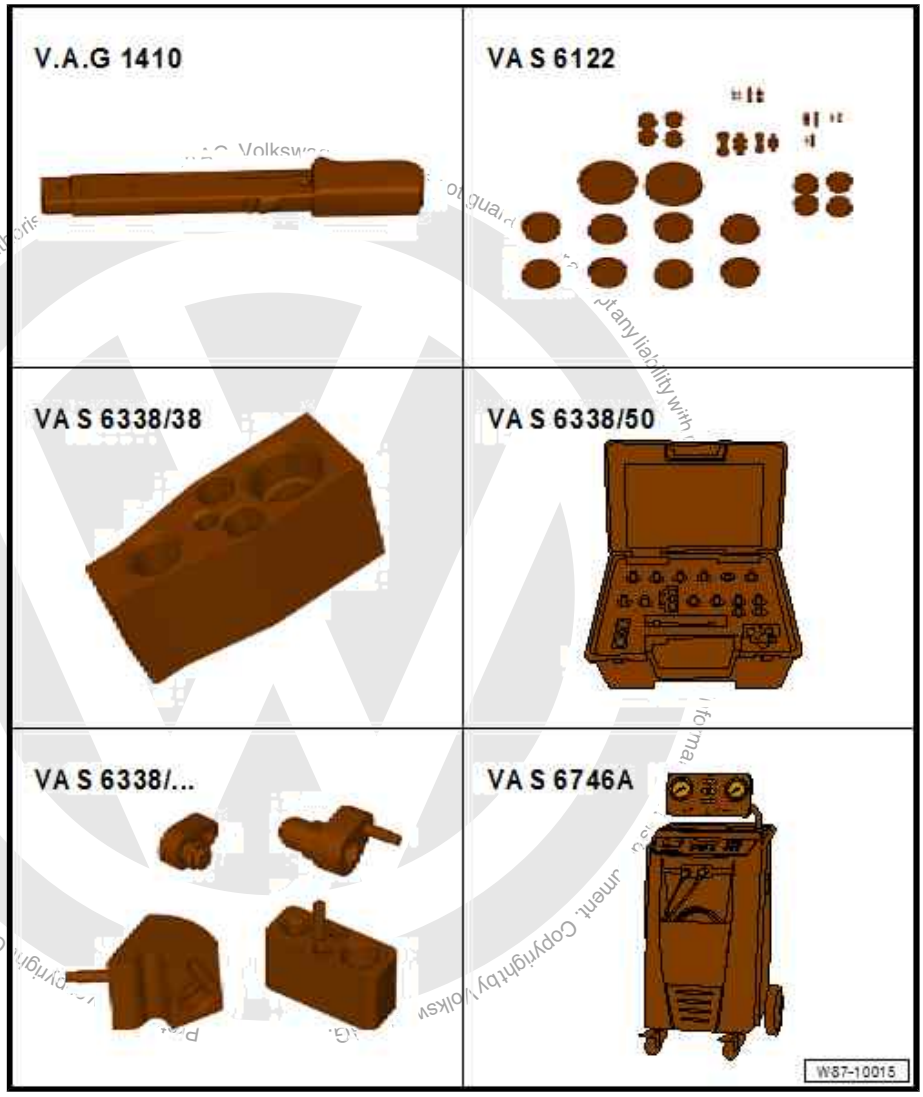

- Torque wrench - V.A.G 1410-
- Engine bung set - VAS 6122-
- Expansion valve adapter - VAS 6338/38-
- Adapter set for refrigerant circuit - VAS 6338/50-
- Adapter for refrigerant circuit on high-pressure side - air conditioner service station, low-pressure side - VAS 6338/60-
- Adapter for connecting refrigerant circuit on high-pressure side - VAS 6338/63-
- Air conditioner service station , e.g. air conditioner service station - VAS 6746A-
- Drill bit, ∅ 6 mm

satelettronica

Note

- *If the vehicle has a second evaporator, the rear refrigerant circuit (roof air conditioning system) must be rinsed first.*
- *The following procedure was created for the 2.0 l common rail engine equipped for left-hand drive. The procedure for other engines should be adapted accordingly.*
- *Flushing a contaminated refrigerant circuit is carried out against the direction of normal flow.*
- *To install the individual flushing adapters, the original threaded connections (nuts and bolts) are to be used and tightened to the respective torque.*

Protected by copyright. Copying for private or commercial purposes, in part or in whole, is not permitted unless authorised by Volkswagen AG. Volkswagen AG does not guarantee or accept any liability with respect to the correctness of information in this document. Copyright by Volkswagen AG.

Setting up

Prepare air conditioner service station as follows

Air conditioner service station with integrated flushing device

– Unscrew quick-release fastener -1- on refrigerant hose on high-pressure side (red) -2-.

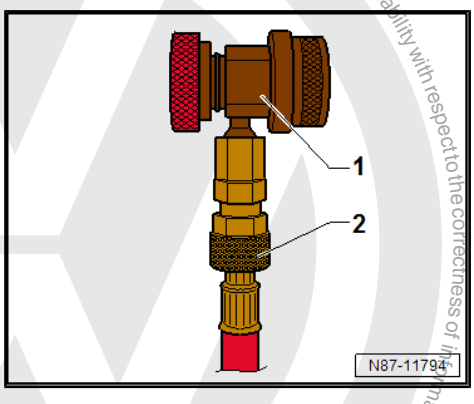

– Unscrew quick-release fastener -1- on refrigerant hose on low-pressure side (blue) -2-.

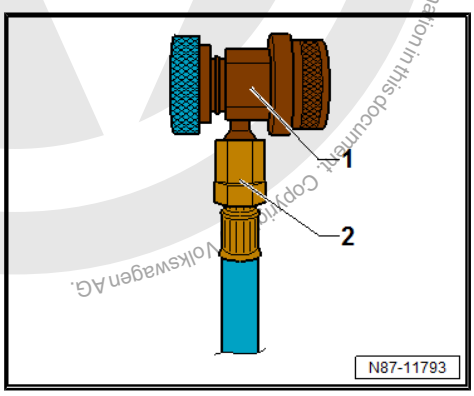

Air conditioner service station with external flushing device

– Unscrew quick-release fastener -1- on refrigerant hose on high-pressure side (red) -2-.

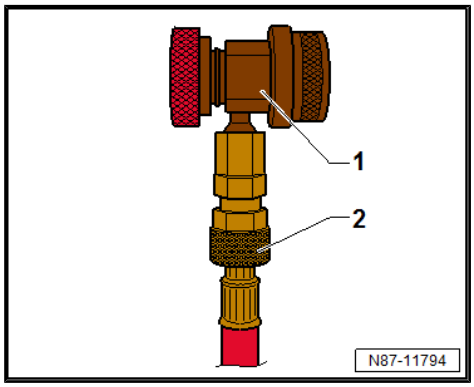

satelettronica

– Connect coolant hose on low-pressure side (blue) -1- from air conditioner service station to filter cartridge -3- of flushing device using quick-release fastener -2-.

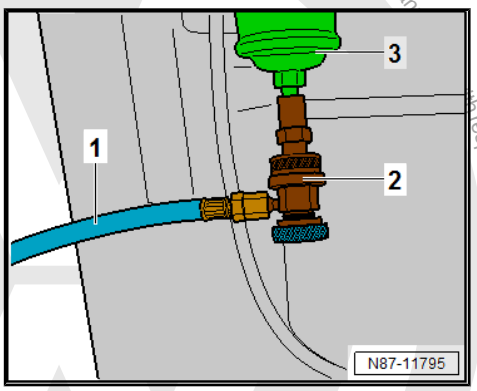

Note

The flushing procedure is carried out with the existing coolant hose (blue) of the external flushing device.

Continuation for all

– Check quantity of refrigerant oil in refrigerant bottle via menu of air conditioner service station .

• There must be at least 7 kg of R134a refrigerant.

– Remove expansion valve for air conditioner refrigerant - N697- ⇒ Heating, air conditioning; Rep. gr. 87 ; Refrigerant circuit; Removing and installing expansion valve .

Note

♦ *When drilling out, ensure that the flow holes -2- and -4- in the expansion valve -1- are located offset to each other.*

♦ *Failure to observe this measure can result in the sealing surface on the expansion valve -1- becoming damaged when drilling, thereby rendering the expansion valve useless for setting up the flushing circuit.*

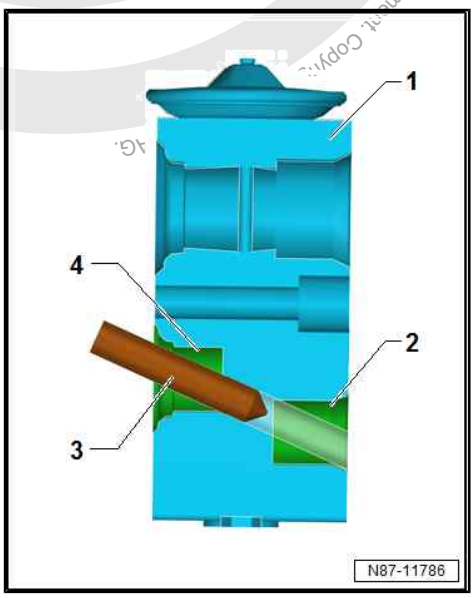

– Drill out expansion valve for air conditioner refrigerant - N697- -1- as shown using ∅ 6 mm drill bit -3-.

– Clean drilled out expansion valve for air conditioner refrigerant - N697- -1- of dirt.

– Install drilled out expansion valve for air conditioner refrigerant - N697- -1-.

– Connect refrigerant lines to drilled out expansion valve for air conditioner refrigerant - N697- -1-.

– Remove battery tray ⇒ Electrical system; Rep. gr. 27 ; Battery; Removing and installing battery tray .

Note

When unclipping and detaching hydraulic line, be aware of slave cylinder.

– Undo nuts -1-.

– Disconnect refrigerant lines -2- and -3-.

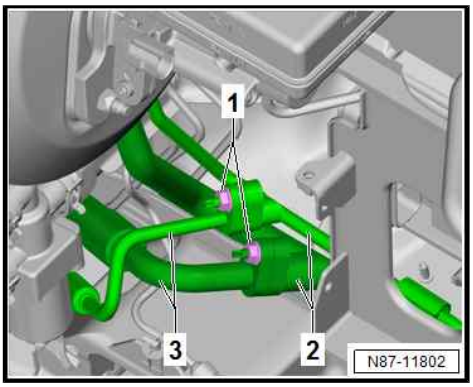

satelettronica

– Connect refrigerant line on low-pressure side (larger diameter) -4- to adapter - VAS 6338/3- -3-.

– Connect refrigerant line on high-pressure side (smaller diameter) -1- to refrigerant circuit adapter high-pressure side - air conditioner service station low-pressure side - VAS 6338/60- -2-.

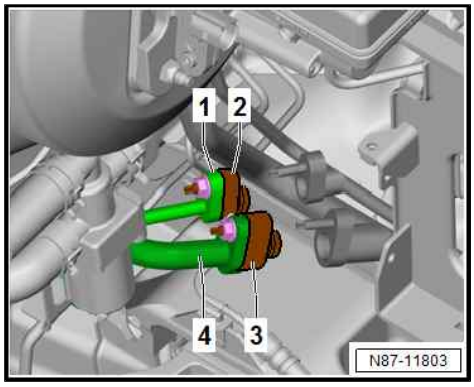

– Connect refrigerant hose on high-pressure side (red) -4- of air conditioner service station to threaded connection of adapter - VAS 6338/3- -5- of refrigerant line for air conditioner service station on low-pressure side (larger diameter) -6-.

– Connect refrigerant hose on low-pressure side (blue) -3- of air conditioner service station to threaded connection of refrigerant circuit adapter high-pressure side - air conditioner service station low-pressure side - VAS 6338/60- -2- of refrigerant line for air conditioner service station on high-pressure side (smaller diameter) -1-.

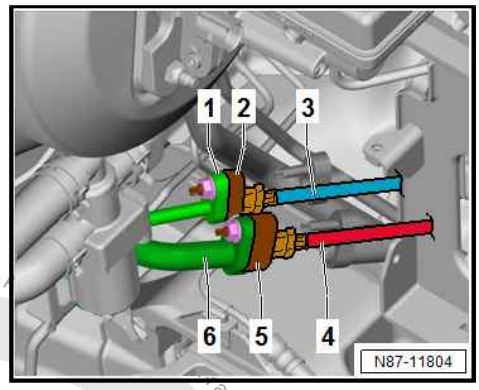

Flush

– Start first flushing sequence via menu of air conditioner service station .

Note

If a flushed refrigerant circuit is not reassembled immediately after flushing, the adapters must be left on the connections. These as well as components that are still open must be sealed with clean bungs from engine bung set - VAS 6122- .

– Remove adapter - VAS 6338/3- and refrigerant circuit adapter high-pressure side - air conditioner service station low-pressure side - VAS 6338/60- .

– Connect refrigerant line low-pressure side (larger diameter) -1- to adapter - VAS 6338/5- -2- and nut -3-.

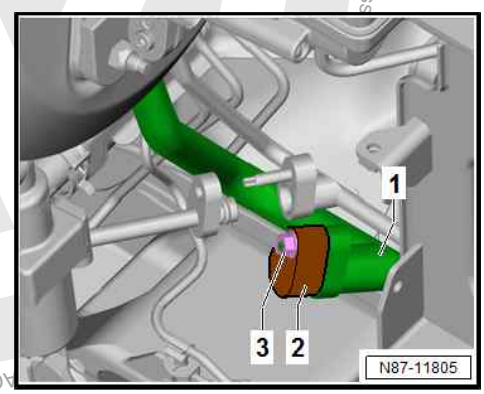

Protected by copyright. Copying for private or commercial purposes, in part or in whole, is not permitted unless authorised by Volkswagen AG. Volkswagen AG does not accept any liability with respect to the correctness
satelettronica

– Connect refrigerant line high-pressure side (smaller diameter) -1- to refrigerant circuit adapter high-pressure side - VAS 6338/63- -2- and nut -3-.

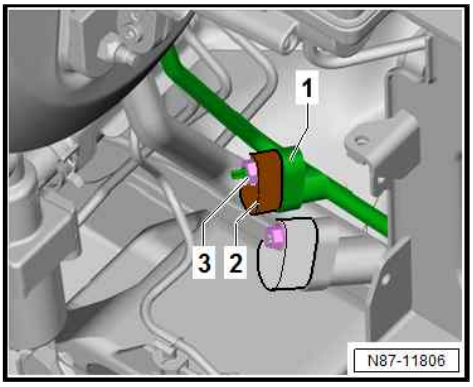

– Remove expansion valve ⇒ Heating, air conditioning; Rep. gr. 87 ; Refrigerant circuit; Removing and installing expansion valve .

– Install expansion valve adapter - VAS 6338/38- .

– Connect refrigerant lines to expansion valve adapter - VAS 6338/38- .

– Remove desiccant bag ⇒ Heating, air conditioning system; Rep. gr. 87 ; Refrigerant circuit; Removing and installing desiccant bag/desiccant cartridge .

– Close receiver on condenser again.

– Remove air conditioner compressor ⇒ Heating, air conditioning; Rep. gr. 87 ; Air conditioner compressor; Removing and installing air conditioner compressor .

– Connect refrigerant line of air conditioner compressor on high-pressure side (smaller diameter) -2- to adapter - VAS 6338/3- -1-.

– Connect refrigerant line of air conditioner compressor on low-pressure side (larger diameter) -3- to adapter - VAS 6338/12- -4-.

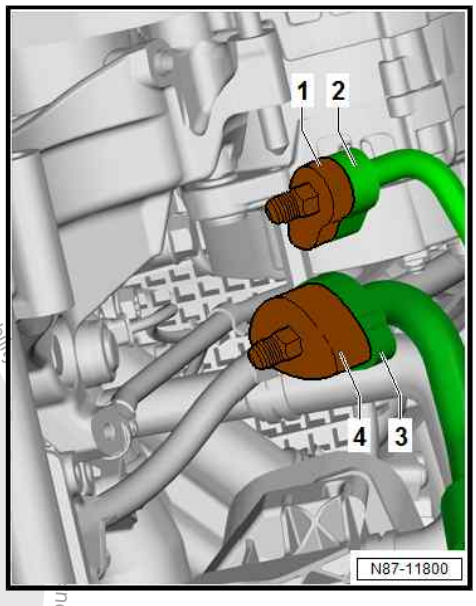

Protected by copyright. Copying for private or commercial purposes, in part or in whole, is not permitted unless authorised by Volkswagen AG. Copyright by Volkswagen AG. Volkswagen AG does not guarantee or accept any liability with respect to the correctness of information in this document.
satelettronica

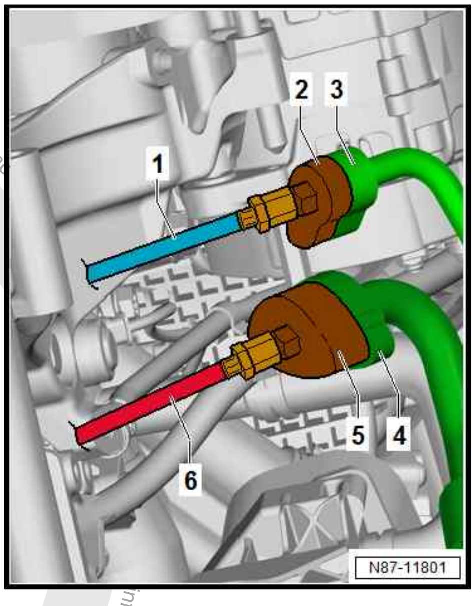

– Connect refrigerant hose on low-pressure side (blue) -1- of air conditioner service station to threaded connection of adapter - VAS 6338/3- -2- of refrigerant line for air conditioner service station on high-pressure side (smaller diameter) -3-.

– Connect refrigerant hose on high-pressure side (red) -6- of air conditioner service station to threaded connection of adapter - VAS 6338/12- -5- of refrigerant line for air conditioner service station on low-pressure side (larger diameter) -4-.

Flush

– Start second flushing sequence via menu of air conditioner service station .

Note

If a flushed refrigerant circuit is not reassembled immediately after flushing, the adapters must be left on the connections. These as well as components that are still open must be sealed with clean bungs from engine bung set - VAS 6122- .

On successful completion of flushing procedure, remove all adapters and renew following components during assembly

- ♦ Air conditioner compressor
- ♦ Expansion valve
- ♦ Expansion valve for air conditioner refrigerant - N697- ,
- ♦ Desiccant bag
- ♦ Evacuating and charging valve, high-pressure side and low-pressure side
- ♦ Oil seals

– Check for damage and note correct installation of hydraulic line of slave cylinder.

– Charge refrigerant circuit ⇒ page 54 .

– Perform leakage test on reattached line connections of refrigerant circuit ⇒ page 57 .

– Bring air conditioning system into operation after charging refrigerant circuit ⇒ Heating, air conditioning; Rep. gr. 87 ; Refrigerant circuit; Bringing air conditioning system into operation after charging refrigerant circuit .

Specified torques

- ♦ Refrigerant circuit; Assembly overview - refrigerant lines ⇒ Heating, air conditioning; Rep. gr. 87 ; Refrigerant circuit; Assembly overview - refrigerant lines
- ♦ Air conditioner compressor; Assembly overview - drive unit for air conditioner compressor ⇒ Heating, air conditioning; Rep. gr. 87 ; Air conditioner compressor; Assembly overview - drive unit for air conditioner compressor
- ♦ Front heater and air conditioning unit; Assembly overview - evaporator housing ⇒ Heating, air conditioning; Rep. gr. 87 ; Front heater and air conditioning unit; Assembly overview - evaporator housing

sateletronica

11.8 Procedure for setting up and flushing refrigerant circuit, Transporter 2016 ►, Transporter 2020 ►

This vehicle is electrified by ABT e-Line.

This manual may have lost its validity due to modifications by ABT e-Line, or may have to be supplemented by additional repair instructions from ABT e-Line.

Please refer to the Electronic Service Information System (ElsaPro), section “Superstructures and modifications” for relevant repair manuals regarding modifications by ABT e-Line.

These can also be obtained from ABT e-Line.

⇒ “11.8.1 Connection diagram for flushing circuit, vehicles with one evaporator”, page 143

⇒ “11.8.2 Connection diagram for flushing circuit, vehicles with second evaporator”, page 144

⇒ “11.8.3 Procedure for setting up and flushing refrigerant circuit, vehicles with one evaporator”, page 145

⇒ “11.8.4 Procedure for setting up and flushing refrigerant circuit, vehicles with second evaporator”, page 149

11.8.1 Connection diagram for flushing circuit, vehicles with one evaporator

This vehicle is electrified by ABT e-Line.

This manual may have lost its validity due to modifications by ABT e-Line, or may have to be supplemented by additional repair instructions from ABT e-Line.

Please refer to the Electronic Service Information System (ElsaPro), section “Superstructures and modifications” for relevant repair manuals regarding modifications by ABT e-Line.

These can also be obtained from ABT e-Line.

Note

The following connection diagrams were created for the 2.0 l common rail engine equipped for left-hand drive. The connection diagram for other engines should be adapted accordingly.

Protected by copyright. Copyright for private or commercial purposes, in part or in whole, is not permitted unless authorised by Volkswagen AG. Volkswagen AG does not guarantee or accept any liability with respect to the correctness of information in this document. Copyright by Volkswagen AG.

satelettronica

1 - Refrigerant line

- ❑ Low-pressure side

2 - Expansion valve adapter - VAS 6338/56-

- ❑ from adapter set for refrigerant circuit - VAS 6338/50-

3 - Refrigerant line

- ❑ High-pressure side

4 - Adapter - VAS 6338/3-

- ❑ from adapter set for refrigerant circuit - VAS 6338/50-

5 - Adapter - VAS 6338/12-

- ❑ from adapter set for refrigerant circuit - VAS 6338/50-

6 - Refrigerant hose

- ❑ High-pressure side
- ❑ from air conditioner service station

7 - Refrigerant hose

- ❑ Low-pressure side
- ❑ from air conditioner service station

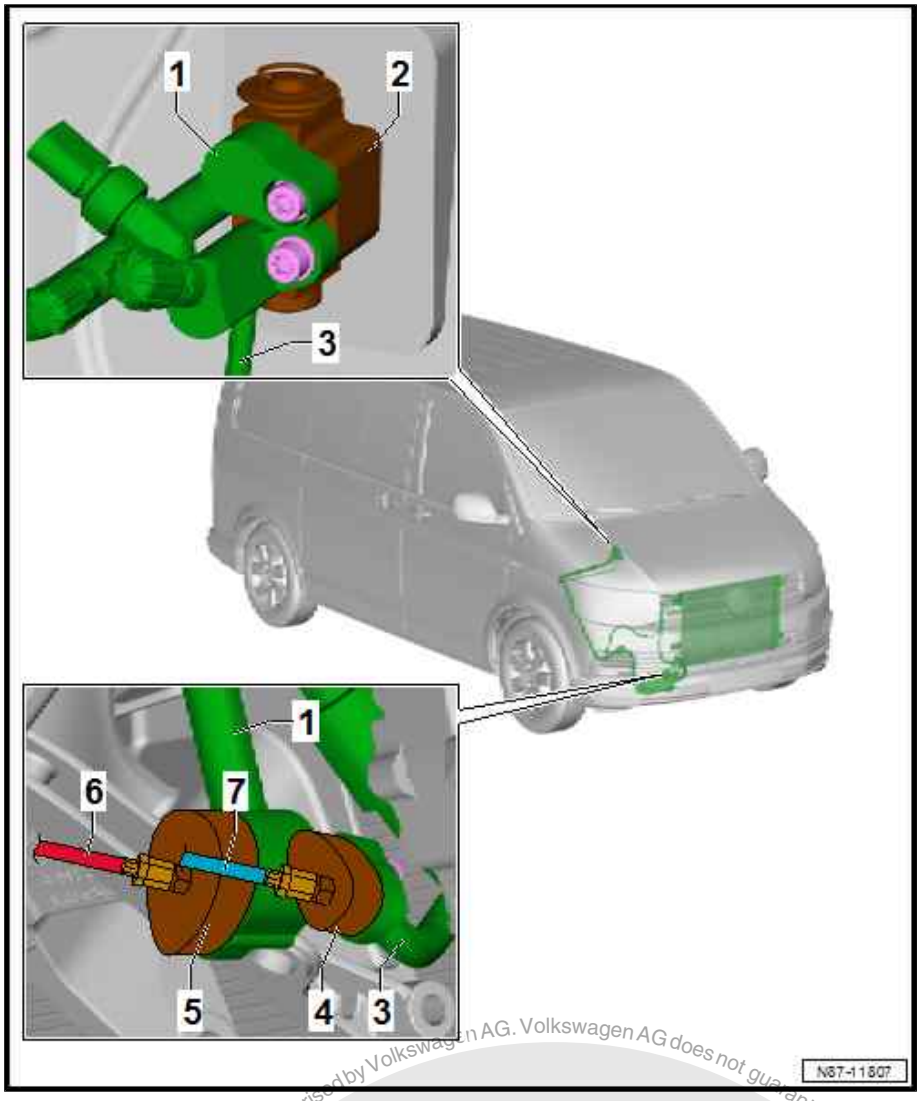

11.8.2 Connection diagram for flushing circuit, vehicles with second evaporator

This vehicle is electrified by ABT e-Line.

This manual may have lost its validity due to modifications by ABT e-Line, or may have to be supplemented by additional repair instructions from ABT e-Line.

Please refer to the Electronic Service Information System (ElsaPro), section “Superstructures and modifications” for relevant repair manuals regarding modifications by ABT e-Line.

These can also be obtained from ABT e-Line.

Note

The following connection diagrams were created for the 2.0 l common rail engine equipped for left-hand drive. The connection diagram for other engines should be adapted accordingly.

Protected by copyright. Copying for private or commercial purposes, in part or in whole, is not permitted unless authorised by Volkswagen AG. Volkswagen AG does not guarantee or accept any liability with respect to the correctness of information in this document. Copyright by Volkswagen AG.
satelettronica

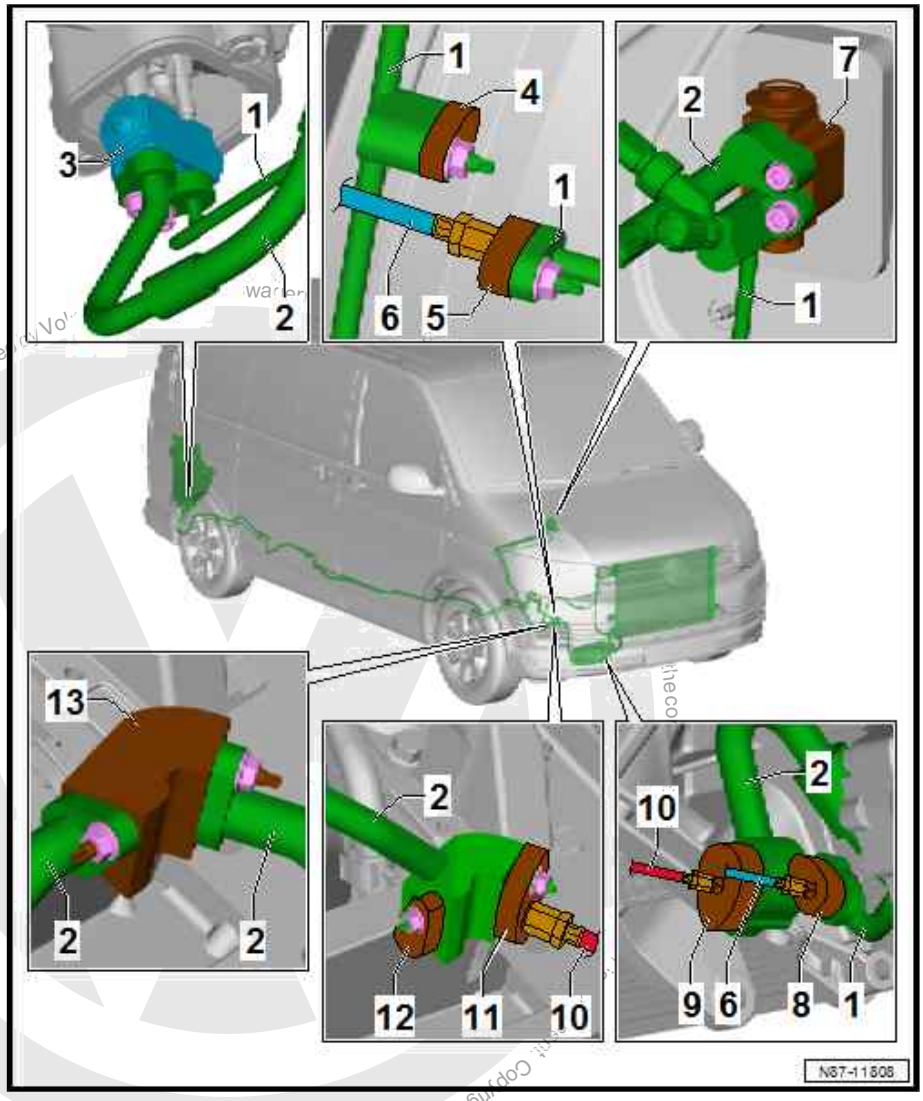

1 - Refrigerant line

- ❑ High-pressure side

2 - Refrigerant line

- ❑ Low-pressure side

3 - Drilled out expansion valve

- ❑ Removing and installing ⇒ Heating, air conditioning; Rep. gr. 87 ; Refrigerant circuit; Removing and installing expansion valve

4 - Adapter for connecting refrigerant circuit on high-pressure side - VAS 6338/63-

5 - Adapter for refrigerant circuit on high-pressure side - air conditioner service station, low-pressure side - VAS 6338/60-

6 - Refrigerant hose

- ❑ Low-pressure side
- ❑ from air conditioner service station

7 - Expansion valve adapter - VAS 6338/56-

- ❑ from adapter set for refrigerant circuit - VAS 6338/50-

8 - Adapter - VAS 6338/12-

- ❑ from adapter set for refrigerant circuit - VAS 6338/50-

9 - Adapter - VAS 6338/3-

- ❑ from adapter set for refrigerant circuit - VAS 6338/50-

10 - Refrigerant hose

- ❑ High-pressure side
- ❑ from air conditioner service station

11 - Adapter for refrigerant circuit on low-pressure side - air conditioner service station, high-pressure side - VAS 6338/61-

12 - Adapter for connecting refrigerant circuit on low-pressure side - VAS 6338/62-

13 - Connecting adapter angle piece - VAS 6338/64-

11.8.3 Procedure for setting up and flushing refrigerant circuit, vehicles with one evaporator

This vehicle is electrified by ABT e-Line.

This manual may have lost its validity due to modifications by ABT e-Line, or may have to be supplemented by additional repair instructions from ABT e-Line.

Please refer to the Electronic Service Information System (ElsaPro), section “Superstructures and modifications” for relevant repair manuals regarding modifications by ABT e-Line.

These can also be obtained from ABT e-Line.

satelettronica

Protected by copyright. Copying for private or commercial purposes, in part or in whole, is not permitted unless authorised by Volkswagen AG. Volkswagen AG does not guarantee or accept any liability with respect to the correctness of information in this document. Copyright by Volkswagen AG.

Special tools and workshop equipment required

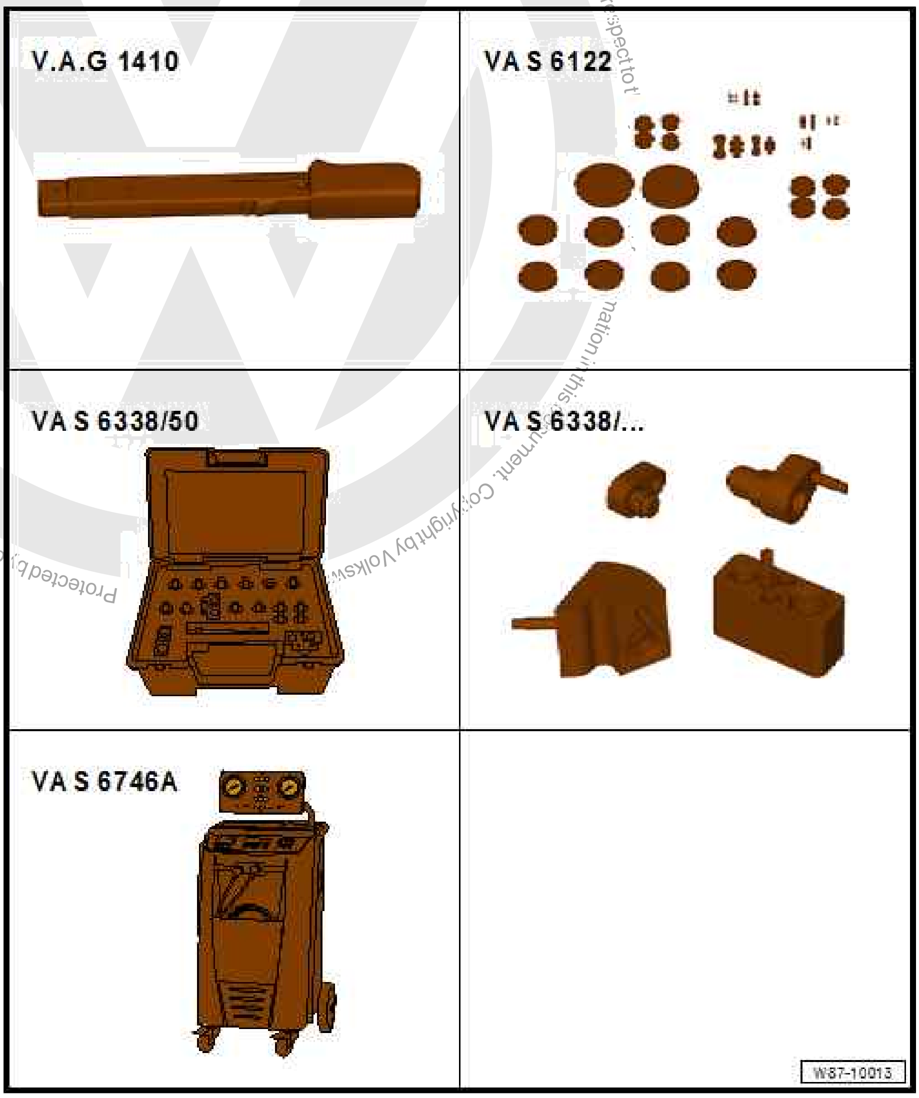

- ♦ Torque wrench - V.A.G 1410-
- ♦ Engine bung set - VAS 6122-
- ♦ Adapter set for refrigerant circuit - VAS 6338/50-
- ♦ Connecting adapter angle piece - VAS 6338/64-
- ♦ Air conditioner service station , e.g. air conditioner service station - VAS 6746A-
- ♦ Drill bit, ∅ 6 mm

satelettronica

Protected by copyright. Copying for private or commercial purposes, in part or in whole, is not permitted unless authorised by Volkswagen AG. Volkswagen AG does not guarantee or accept any liability with respect to the correctness of information in this document. Copyright by Volkswagen AG.

Note

- *The following procedure was created for the 2.0 l common rail engine equipped for left-hand drive. The procedure for other engines should be adapted accordingly.*
- *Flushing a contaminated refrigerant circuit is carried out against the direction of normal flow.*
- *To install the individual flushing adapters, the original threaded connections (nuts and bolts) are to be used and tightened to the respective torque.*

Setting up

Prepare air conditioner service station as follows

Air conditioner service station with integrated flushing device

– Unscrew quick-release fastener -1- on refrigerant hose on high-pressure side (red) -2-.

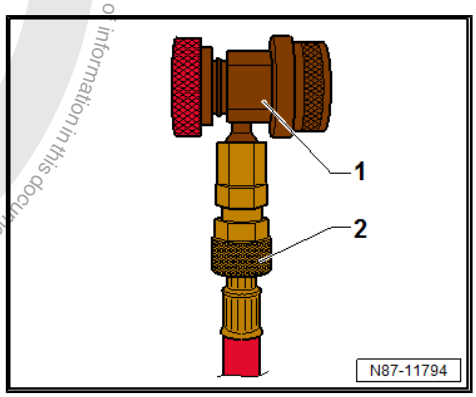

– Unscrew quick-release fastener -1- on refrigerant hose on low-pressure side (blue) -2-.

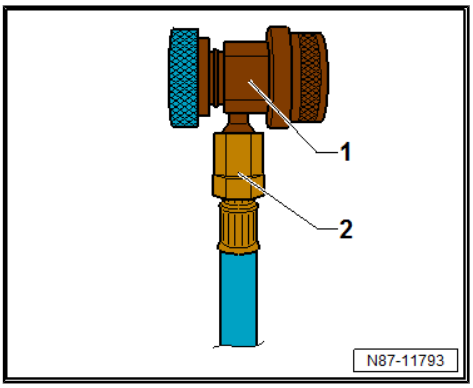

Air conditioner service station with external flushing device

– Unscrew quick-release fastener -1- on refrigerant hose on high-pressure side (red) -2-.

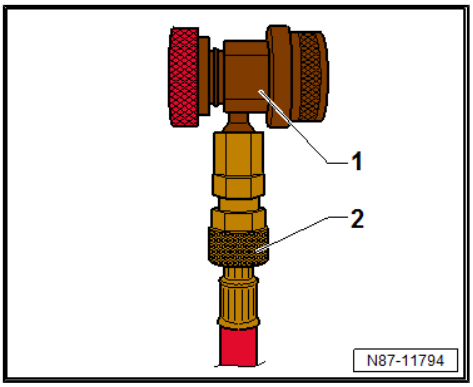

satelettronica

– Connect coolant hose on low-pressure side (blue) -1- from air conditioner service station to filter cartridge -3- of flushing device using quick-release fastener -2-.

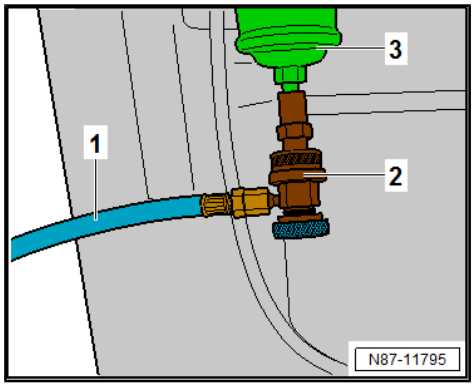

Note

The flushing procedure is carried out with the existing coolant hose (blue) of the external flushing device.

Continuation for all

– Check quantity of refrigerant oil in refrigerant bottle via menu of air conditioner service station .

• There must be at least 7 kg of R134a refrigerant.

– Remove expansion valve ⇒ Heating, air conditioning; Rep. gr. 87 ; Refrigerant circuit; Removing and installing expansion valve .

– Install expansion valve adapter - VAS 6338/56- from adapter set for refrigerant circuit - VAS 6338/50- .

– Connect refrigerant lines to expansion valve adapter - VAS 6338/56- .

– Remove desiccant bag ⇒ Heating, air conditioning system; Rep. gr. 87 ; Refrigerant circuit; Removing and installing desiccant bag/desiccant cartridge .

– Close receiver on condenser again.

– Remove air conditioner compressor ⇒ Heating, air conditioning; Rep. gr. 87 ; Air conditioner compressor; Removing and installing air conditioner compressor .

– Connect refrigerant line of air conditioner compressor on high-pressure side (smaller diameter) -1- to adapter - VAS 6338/3- -2-.

– Connect refrigerant line of air conditioner compressor on low-pressure side (larger diameter) -3- to adapter - VAS 6338/12- -4-.

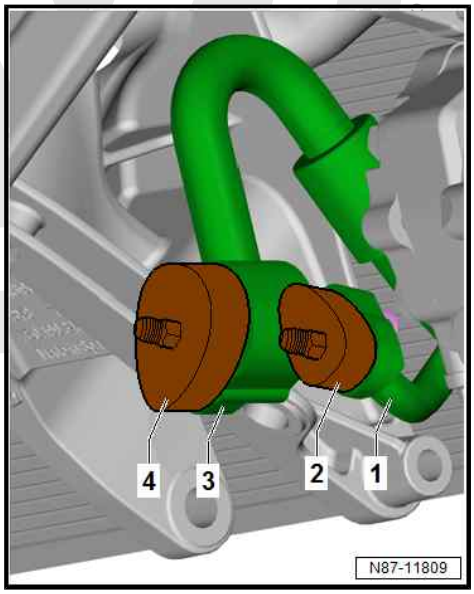

Protected by copyright. Copying for private or commercial purposes, in part or in whole, is not permitted unless authorised by Volkswagen AG. Volkswagen AG does not guarantee or accept any liability with respect to the correctness
satelettronica

– Connect refrigerant hose on low-pressure side (blue) -5- of air conditioner service station to threaded connection of adapter - VAS 6338/3- -2- of refrigerant line for air conditioner service station on high-pressure side (smaller diameter) -1-.

– Connect refrigerant hose on high-pressure side (red) -6- of air conditioner service station to threaded connection of adapter - VAS 6338/12- -4- of refrigerant line for air conditioner service station on low-pressure side (larger diameter) -3-.

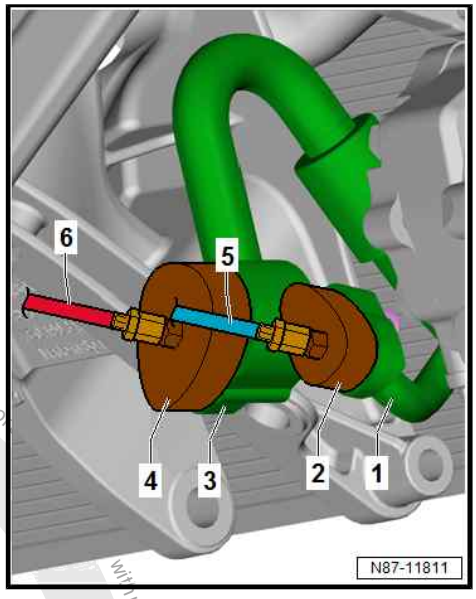

Flush

– Start flushing procedure via menu of air conditioner service station .

Note

If a flushed refrigerant circuit is not reassembled immediately after flushing, the adapters must be left on the connections. These as well as components that are still open must be sealed with clean bungs from engine bung set - VAS 6122- .

On successful completion of flushing procedure, remove all adapters and renew following components during assembly

- Air conditioner compressor
- Expansion valve
- Desiccant bag
- Evacuating and charging valve, high-pressure side and low-pressure side
- Oil seals

– Charge refrigerant circuit ⇒ page 54 .

– Perform leakage test on reattached line connections of refrigerant circuit ⇒ page 57 .

– Bring air conditioning system into operation after charging refrigerant circuit ⇒ Heating, air conditioning; Rep. gr. 87 ; Refrigerant circuit; Bringing air conditioning system into operation after charging refrigerant circuit .

Specified torques

- Air conditioner compressor; Assembly overview - drive unit for air conditioner compressor ⇒ Heating, air conditioning; Rep. gr. 87 ; Air conditioner compressor; Assembly overview - drive unit for air conditioner compressor

11.8.4 Procedure for setting up and flushing refrigerant circuit, vehicles with second evaporator

This vehicle is electrified by ABT e-Line.

This manual may have lost its validity due to modifications by ABT e-Line, or may have to be supplemented by additional repair instructions from ABT e-Line.

Please refer to the Electronic Service Information System (ElsaPro), section “Superstructures and modifications” for relevant repair manuals regarding modifications by ABT e-Line.

These can also be obtained from ABT e-Line.

Protected by copyright. Copying for private or commercial purposes, in part or in whole, is not permitted unless authorised by Volkswagen AG. Volkswagen AG does not guarantee or accept any liability with respect to the correctness of information in this document. Copyright by Volkswagen AG.
satelettronica

Special tools and workshop equipment required

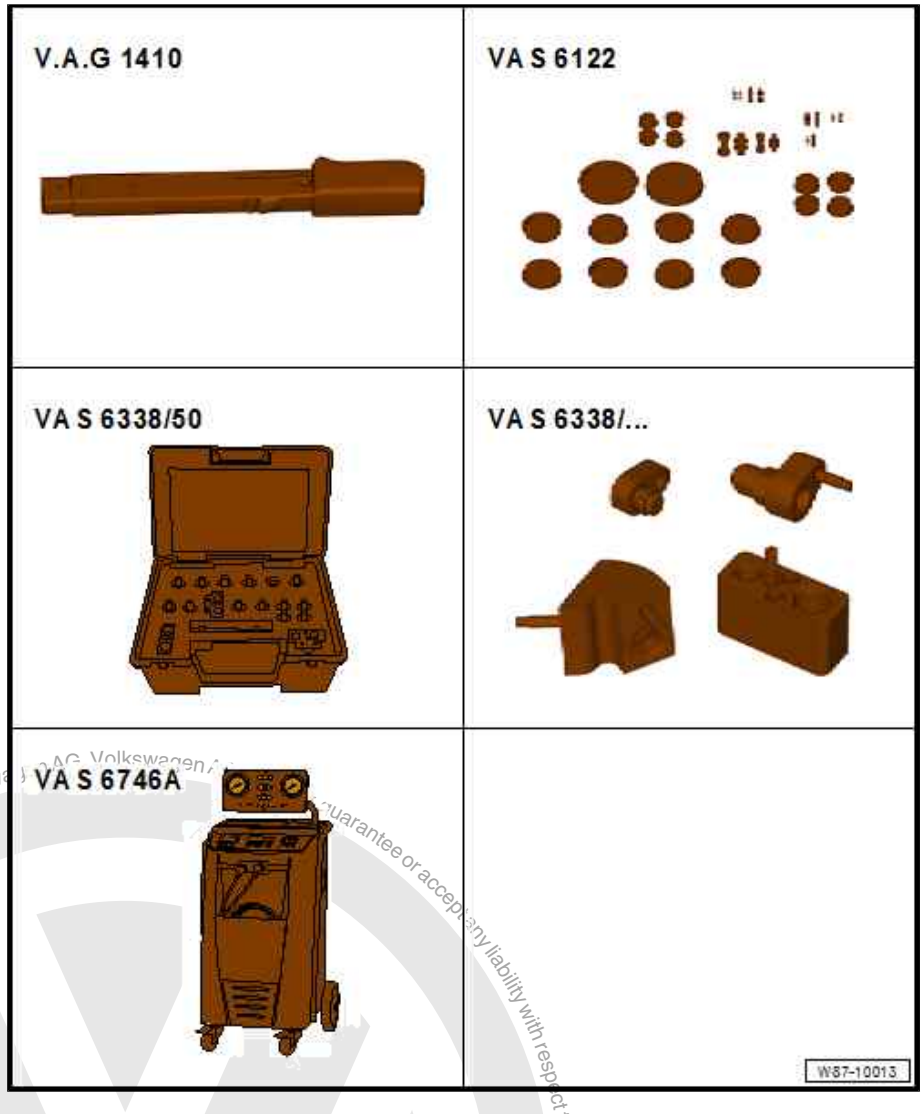

- Torque wrench - V.A.G 1410-
- Engine bung set - VAS 6122-
- Adapter set for refrigerant circuit - VAS 6338/50-
- Adapter for refrigerant circuit on high-pressure side - air conditioner service station, low-pressure side - VAS 6338/60-
- Adapter for refrigerant circuit on low-pressure side - air conditioner service station, high-pressure side - VAS 6338/61-
- Adapter for connecting refrigerant circuit on low-pressure side - VAS 6338/62-
- Adapter for connecting refrigerant circuit on high-pressure side - VAS 6338/63-
- Connecting adapter angle piece - VAS 6338/64-
- Air conditioner service station , e.g. air conditioner service station - VAS 6746A-
- Drill bit, ∅ 6 mm

satelettronica

Note

- *The following procedure was created for the 2.0 l common rail engine equipped for left-hand drive. The procedure for other engines should be adapted accordingly.*
- *Flushing a contaminated refrigerant circuit is carried out against the direction of normal flow.*
- *To install the individual flushing adapters, the original threaded connections (nuts and bolts) are to be used and tightened to the respective torque.*

Setting up

Prepare air conditioner service station as follows

Air conditioner service station with integrated flushing device

– Unscrew quick-release fastener -1- on refrigerant hose on high-pressure side (red) -2-.

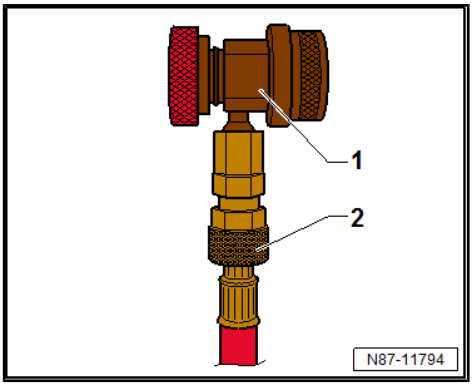

– Unscrew quick-release fastener -1- on refrigerant hose on low-pressure side (blue) -2-.

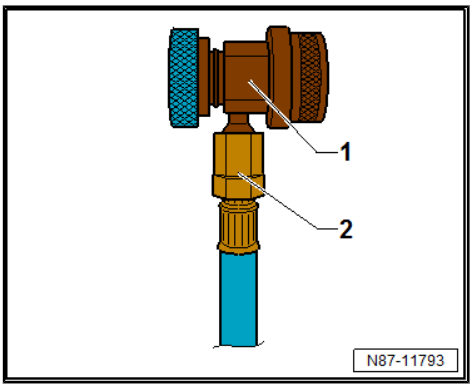

Air conditioner service station with external flushing device

– Unscrew quick-release fastener -1- on refrigerant hose on high-pressure side (red) -2-.

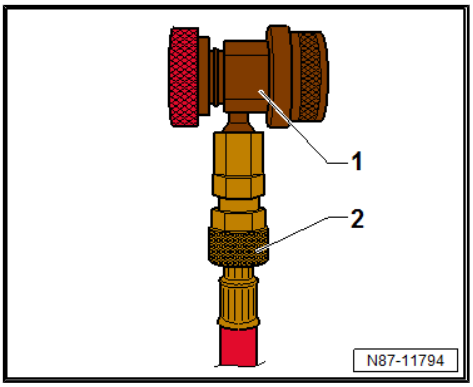

satelettronica

– Connect coolant hose on low-pressure side (blue) -1- from air conditioner service station to filter cartridge -3- of flushing device using quick-release fastener -2-.

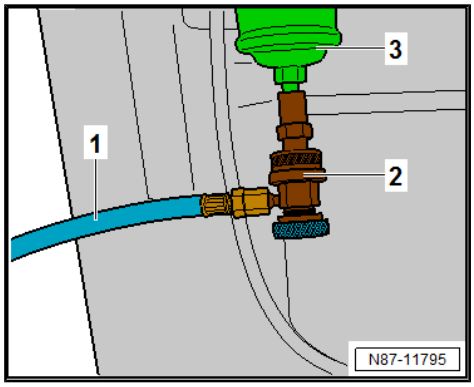

Note

The flushing procedure is carried out with the existing coolant hose (blue) of the external flushing device.

Continuation for all

– Check quantity of refrigerant oil in refrigerant bottle via menu of air conditioner service station .

• There must be at least 7 kg of R134a refrigerant.

– Remove expansion valve ⇒ Heating, air conditioning; Rep. gr. 87 ; Refrigerant circuit; Removing and installing expansion valve .

– Install expansion valve adapter - VAS 6338/56- from adapter set for refrigerant circuit - VAS 6338/50- .

– Connect refrigerant lines to expansion valve adapter - VAS 6338/56- .

– Remove desiccant bag ⇒ Heating, air conditioning system; Rep. gr. 87 ; Refrigerant circuit; Removing and installing desiccant bag/desiccant cartridge .

– Close receiver on condenser again.

– Remove air filter housing ⇒ Rep. gr. 23 ; Air filter; Removing and installing air filter housing .

– Remove right headlight ⇒ Electrical system; Rep. gr. 94 ; Headlights; Removing and installing headlights .

– Disconnect refrigerant line in area of angle piece.

– Install connecting adapter angle piece - VAS 6338/64- -3- on nuts -1- and refrigerant lines -2-.

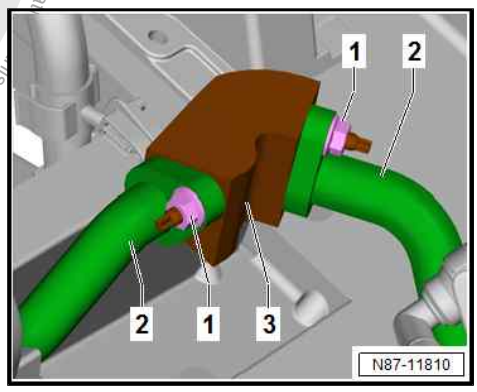

– Disconnect refrigerant lines on high-pressure side (smaller diameter) -1- and -5-.

– Connect refrigerant lines high-pressure side (smaller diameter) -1- to refrigerant circuit adapter high-pressure side - VAS 6338/63- -2- and nut -4-.

– Connect refrigerant lines on high-pressure side (smaller diameter) -5- to refrigerant circuit adapter high-pressure side - air conditioner service station low-pressure side - VAS 6338/60- -3- and nut -4-.

– Remove air conditioner compressor ⇒ Heating, air conditioning; Rep. gr. 87 ; Air conditioner compressor; Removing and installing air conditioner compressor .

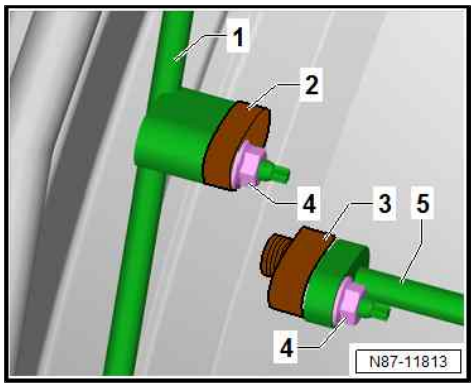

Protected by copyright. Copying for private or commercial purposes, in part or in whole, is not permitted unless authorised by Volkswagen AG. Volkswagen AG does not guarantee or accept any liability with respect to the correctness of information in this document. Copyright by Volkswagen AG.

satelettronica

– Connect refrigerant line of air conditioner compressor on high-pressure side (smaller diameter) -1- to adapter - VAS 6338/3- -2-.

– Connect refrigerant line of air conditioner compressor on low-pressure side (larger diameter) -3- to adapter - VAS 6338/12- -4-.

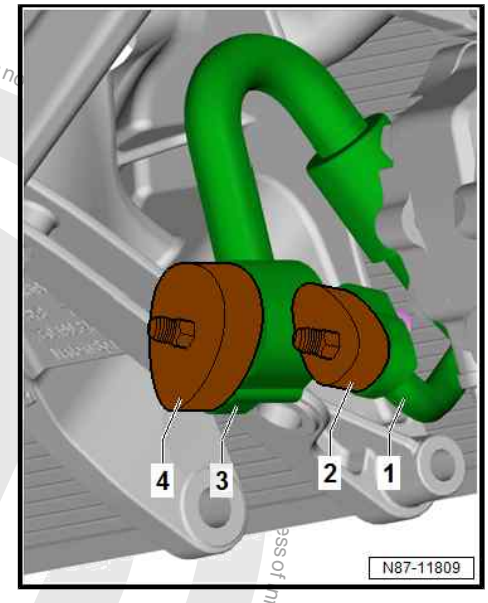

– Connect refrigerant hose on low-pressure side (blue) -5- of air conditioner service station to threaded connection of adapter - VAS 6338/3- -2- of refrigerant line for air conditioner service station on high-pressure side (smaller diameter) -1-.

– Connect refrigerant hose on high-pressure side (red) -6- of air conditioner service station to threaded connection of adapter - VAS 6338/12- -4- of refrigerant line for air conditioner service station on low-pressure side (larger diameter) -3-.

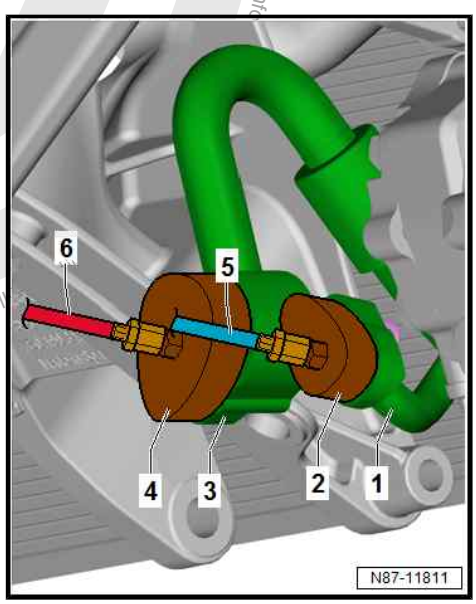

Flush

– Start first flushing sequence via menu of air conditioner service station .

Note

If a flushed refrigerant circuit is not reassembled immediately after flushing, the adapters must be left on the connections. These as well as components that are still open must be sealed with clean bungs from engine bung set - VAS 6122- .

– Connect refrigerant line low-pressure side (larger diameter) -1- to refrigerant circuit adapter low-pressure side - VAS 6338/62- -2- and nut -3-.

– Connect refrigerant line on low-pressure side (larger diameter) -1- to refrigerant circuit adapter low-pressure side - air conditioner service station high-pressure side - VAS 6338/61- -4- and nut -5-.

– Connect refrigerant hose on high-pressure side (red) -6- of air conditioner service station to threaded connection of refrigerant circuit adapter low-pressure side - air conditioner service station high-pressure side - VAS 6338/61- -4- of refrigerant line for air conditioner service station on low-pressure side (larger diameter) -1-.

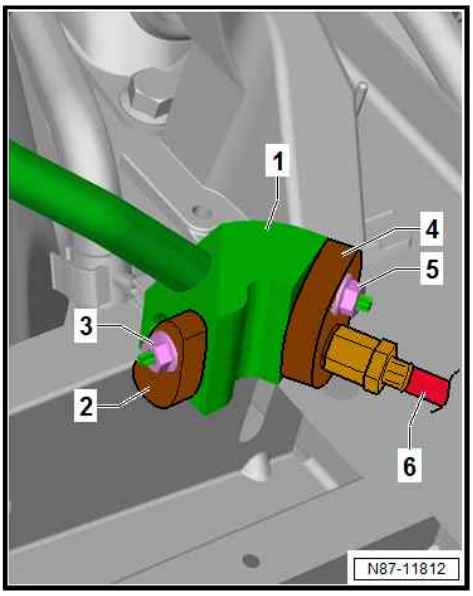

satelettronica

Note

Disregard items 1, 2 and 4.

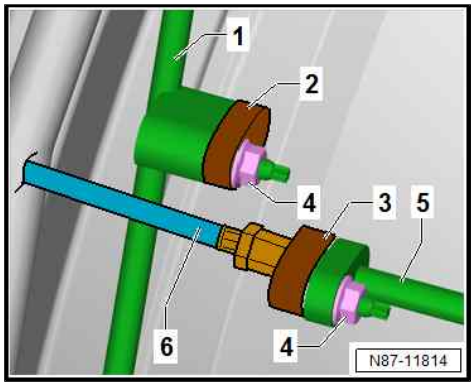

- Connect refrigerant hose on low-pressure side (blue) -6- of air conditioner service station to threaded connection of refrigerant circuit adapter high-pressure side - air conditioner service station low-pressure side - VAS 6338/60- -3- of refrigerant line on high-pressure side (smaller diameter) -5-.
- Remove rear expansion valve ⇒ Heating, air conditioning; Rep. gr. 87 ; Refrigerant circuit; Removing and installing expansion valve .

Protected by copyright. Copying for private or commercial purposes, in part or in whole, is not permitted unless authorised by Volkswagen AG. Volkswagen AG does not guarantee or accept any liability with respect to the correctness of information in this document. Copyright by Volkswagen AG.

satelettronica

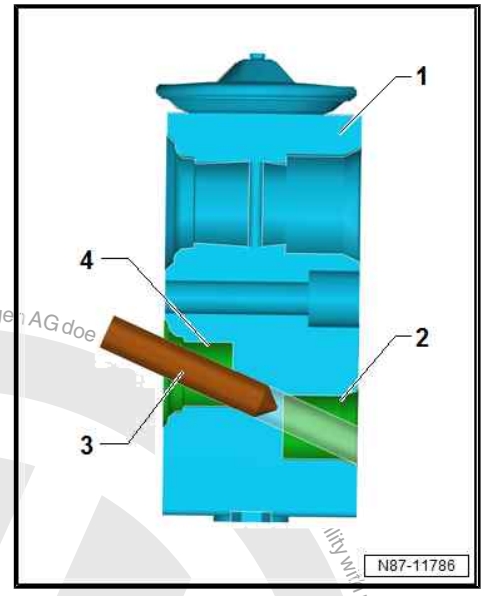

Note

- *When drilling out, ensure that the flow holes -2- and -4- in the expansion valve -1- are located offset to each other.*
- *Failure to observe this measure can result in the sealing surface on the expansion valve -1- becoming damaged when drilling, thereby rendering the expansion valve useless for setting up the flushing circuit.*

– Drill out expansion valve -1- as shown using ∅ 6 mm bit -3-.
– Clean drilled out expansion valve -1- of dirt.
– Install drilled out expansion valve -1-.
– Connect refrigerant lines to drilled out expansion valve -1-.

Flush

– Start second flushing sequence via menu of air conditioner service station .

Note

If a flushed refrigerant circuit is not reassembled immediately after flushing, the adapters must be left on the connections. These as well as components that are still open must be sealed with clean bungs from engine bung set - VAS 6122- .

On successful completion of flushing procedure, remove all adapters and renew following components during assembly

- Air conditioner compressor
- Front expansion valve
- Rear expansion valve
- Desiccant bag
- Evacuating and charging valve, high-pressure side and low-pressure side
- Oil seals

– Charge refrigerant circuit ⇒ page 54 .
– Perform leakage test on reattached line connections of refrigerant circuit ⇒ page 57 .
– Bring air conditioning system into operation after charging refrigerant circuit ⇒ Heating, air conditioning; Rep. gr. 87 ; Refrigerant circuit; Bringing air conditioning system into operation after charging refrigerant circuit .

Specified torques

- Air conditioner compressor; Assembly overview - drive unit for air conditioner compressor ⇒ Heating, air conditioning; Rep. gr. 87 ; Air conditioner compressor; Assembly overview - drive unit for air conditioner compressor

Protected by copyright. Copying for private or commercial purposes, in part or in whole, is not permitted unless authorised by Volkswagen AG. Volkswagen AG does not make any representation or warranty with respect to the correctness of information in this document. Copyright by Volkswagen AG.
satelettronica

12 Complaints

12.1 Possible complaints about refrigerant circuit

Note

- *The air conditioning system is operating correctly if the air emerging from the vent on the dashboard is at a temperature of 7 °C or less.*
- *Set the Climatronic to: "LO".*
- *Set the air conditioning system: "A/C" on; "max"; "cold".*

12.1.1 Conditions for testing:

- Self-diagnosis of the air conditioning system with the Vehicle diagnosis, testing and information system - VAS 5051A- using "Guided Fault Finding" cannot detect any faults; no switch-off conditions for the air conditioner compressor are set in the measured value block (only when the vehicle "air conditioning system" is fitted with self-diagnosis).

⇒ Rep. gr. 87

12.1.2 Possible complaints

Note

*For all complaints marked with * ⇒ page 161 .*

- The cooling has failed completely. *
- Insufficient cooling output at all vehicle or engine speeds. *
- No or insufficient cooling after driving a few miles. *
- The air conditioner compressor, the air conditioning system magnetic clutch - N25- or the air conditioner compressor regulating valve - N280- have been switched off by low-pressure switch for magnetic clutch - F73- , high-pressure switch for magnetic clutch - F118- , air conditioning system pressure switch - F129- or by operating and display unit for Climatronic air conditioning system - E87- or Climatronic control unit - J255- because pressure was too high or too low.* *
- No fresh air flow, or very much reduced fresh air flow after driving some distance (evaporator iced up). *

In addition, the following problems may occur:

The air conditioner compressor is noisy

– Tighten the securing screws for the air conditioner compressor and the air conditioner compressor bracket using a torque wrench.

– Check routing of refrigerant pipes; they must not touch other components and must be installed without tension (adjust if necessary).

Protected by copyright. Copying for private or commercial purposes, in whole or in part, is not permitted unless authorised by Volkswagen AG. Volkswagen AG does not guarantee or accept any liability with respect to the correctness of information in this document. Copyright by Volkswagen AG.

satelettronica

Noises (refrigerant hammering) occur immediately after the air conditioning is switched on and/or in a curve or when the brakes are applied:

– Discharge, evacuate and re-charge refrigerant circuit (too much refrigerant in circuit).

Note

♦ *Excess refrigerant oil in the circuit may also cause this problem (e.g. if the refrigerant oil level was not checked after the air conditioner compressor was renewed). In case of this complaint, the refrigerant circuit must be purged with R134a refrigerant* ⇒ page 70 *.*

♦ *The refrigerant must be drained from the air conditioning compressor. To facilitate this process, turn the air conditioner compressor over by hand at the poly V-belt pulley or coupling disc of the magnetic coupling. Then fill refrigerant circuit with total amount of refrigerant oil (50 g direct into air conditioner compressor) according to ⇒ vehicle-specific workshop manual .*

Water sprays out of the vents (in dash panel or footwell) although air conditioning system is otherwise functioning properly:

– Check proper routing of condensate drain; it must not be crushed or kinked.

– The condensed water drain valve must not be hindered in its operation by wax or underbody sealant and must open and close properly.

– Check the plenum chamber cover; it must be undamaged and be installed correctly (no water must flow into the evaporator).

– Check water drains in plenum chamber; they must not be blocked (e.g. by leaves).

12.2 Odours from heater and air conditioner unit

12.2.1 Does the odour emanate from the evaporator or heat exchanger?

♦ Fishy smell

– Due to leak in engine's cooling system or in heat exchanger of heater and air conditioner unit.

Note

If the fishy smell is weaker when the temperature is set to “cold” or stronger when the temperature is set to “warm”, check the heat exchanger for leaks.

♦ Smell of a burnt clutch

♦ Vapours from foot mats, retrospectively installed seat covers etc.

♦ Putrid, mouldy smell

– Caused by accumulation of debris, pine needles etc. in plenum chamber

Protected by copyright. Copying for private or commercial purposes, in part or in whole, is not permitted unless authorised by Volkswagen AG. Volkswagen AG does not guarantee or accept any liability with respect to the correctness of information in this document. Copyright by Volkswagen AG.

satelettronica

Note

Clean plenum chamber.

– Stagnant water that cannot flow out of plenum chamber.

Note

Check water drains in plenum chamber.

♦ Smell from heater and air conditioner unit

Note

Smells that originate from the heater and air conditioner unit can be detected in fresh air mode and in recirculation mode.

– Due to too much condensate in the heater and air conditioner unit

Note

Check the condensation water drains ⇒ Rep. gr. 87 as indicated in the vehicle-specific repair manual.

– Due to an old or very dirty dust and pollen filter

Note

Check the dust and pollen filter ⇒ Rep. gr. 80 as indicated in the vehicle-specific repair manual.

– Due to deposits on the fins of the evaporator

Note

Clean the evaporator, using the ultrasonic air conditioner cleaning unit - VAS 6189A- ⇒ page 158 or the suction feed spray-gun - V.A.G 1538- and corresponding spray lance ⇒ page 159 .

12.2.2 Ultrasonic air conditioner cleaning unit - VAS 6189A-

– The ultrasonic air conditioner cleaning unit - VAS 6189A- must be placed in the front-passenger footwell and sprays the agent Aero-Clean. Aero-Clean neutralises microbes and bacteria in the heater and air conditioner unit.

The device is provided with instructions for use.

Current equipment ⇒ Electronic parts catalogue .

Protected by copyright. Copyright by Volkswagen AG. Volkswagen AG does not guarantee or accept any liability with respect to the correctness of information in this document. Copying for private or commercial purposes, in part or in whole, is not permitted unless authorised by Volkswagen AG.
satelettronica

12.2.3 Spraying the evaporator with the suction feed spray-gun - V.A.G 1538- and spray lance

Directly spray the evaporator with cleaning solution using a spray lance (approx. 10 bar). The cleaning solution neutralises microbes and bacteria directly on the evaporator.

In order to enable access to the evaporator, preparatory work and different spraying lances are necessary, e.g. V.A.G 1538/5; V.A.G 1538/6 or V.A.G 1538/7.

Vehicle-specific instructions for user are provided with the evaporator cleaning solution “D 600 100 A2”.

Current devices and spray lances ⇒ Electronic parts catalogue .

Protected by copyright. Copying for private or commercial purposes, in part or in whole, is not permitted unless authorised by Volkswagen AG. Volkswagen AG does not guarantee or accept any liability with respect to the correctness of information in this document. Copyright by Volkswagen AG.

satelettronica

13 Connecting the air conditioning service station

13.1 For vehicles that have connections on both low-pressure and high-pressure sides of refrigerant circuit

13.1.1 Connecting a air conditioner service station for measuring and testing

- Switch off ignition.
- Connect the air conditioner service station to the power supply.
- Connect quick-release coupling adapters to filler hoses of air conditioner service station (handwheels not turned inwards, i.e. manual stop valves not open).
- Switch on air conditioner service station in this state and evacuate charging hoses (necessary only if air is in the charging hoses).
- Switch off air conditioner service station .
- Unscrew sealing cap from service connections (with valve).
- Connect air conditioner service station via service connections to vehicle refrigerant circuit using quick-release coupling adapters.
- Turn handwheel of quick-release coupling adapter inwards only far enough to ensure that valves on service connections are open (check using a pressure gauge; do not overstress valves).
- Perform the intended measuring and checking work.

Copyright by Volkswagen AG. Volkswagen AG does not guarantee or accept any liability with respect to the correctness of information in this document. Copyright by Volkswagen AG. Protected by copyright. Copying for private or commercial purposes, in part or in whole, is not permitted unless authorised by Volkswagen AG.
satelettronica

14 Checking pressures on vehicles

14.1 Checking pressures in the refrigerant circuit (using a air conditioning service station)

Note

- *Check cooling output. The air conditioning system is operating correctly if the air emerging from the vent on the dashboard is at a temperature of 7 °C or less.*
- *Set the Climatronic to: “LO”.*
- *Set the air conditioning system: “A/C” on; “max”; “cold”.*
- *Connections with valve and service connections for measurement and testing*

14.1.1 Conditions for testing

- Radiator and condenser clean (clean if necessary)
- The heat insulation on expansion valve is OK and properly installed. See vehicle-specific repair manual ⇒ Rep. gr. 87 .
- The poly V-belt is OK and properly tensioned. The V-belt for air conditioner compressor and alternator is in good condition and correctly tensioned. See vehicle-specific repair manual ⇒ Rep. gr. 87
- All air ducts, covers and seals are OK and properly installed.
- Fault-finding on the electrical systems and vacuum system has found no faults. See vehicle-specific repair manual ⇒ Rep. gr. 87
- Self-diagnosis of the air conditioning system with the vehicle diagnosis, testing and information system - VAS 5051A- using “guided fault finding” cannot detect any faults; no switch-off conditions for the air conditioner compressor are set in the measured value block (only when the vehicle “air conditioning system” is fitted with self-diagnosis).
- The passage of air through the dust and pollen filter is not impaired by dirt. See vehicle-specific repair manual ⇒ Rep. gr. 87
- The heater and air conditioner does not draw any secondary air at highest fresh air blower speed. evaporator and heater not drawing in secondary air at maximum fresh-air blower speed See vehicle-specific repair manual ⇒ Rep. gr. 87
- The air duct flaps in the heater and air conditioner reach their stop positions. See vehicle-specific repair manual ⇒ Rep. gr. 87
- The fresh air intake ducts under the bonnet and in the passenger compartment and their water drain valves are in good condition. See vehicle-specific repair manual ⇒ Rep. gr. 87
- Engine warm.
- Vehicle not exposed to sunlight
- Ambient temperature is above 15°C.
- All dash panel vents open

Protected by copyright. Copying for private or commercial purposes, in part or in whole, is not permitted unless authorised by Volkswagen AG. Volkswagen AG does not guarantee or accept any liability with respect to the correctness of information in this document. Copyright by Volkswagen AG.
satelettronica

Protected by copyright. Copying for private or commercial purposes, in part or in whole, is not permitted unless authorised by Volkswagen AG. Volkswagen AG does not guarantee or accept any liability with respect to the correctness of information in this document. Copyright by Volkswagen AG.

- Engine running and air conditioner set to maximum cooling output

⇒ Rep. gr. 87

Set maximum cooling output

Settings on operating and display unit for Climatronic air conditioning system - E87-

– Select “Auto” mode (air conditioner compressor switched on).

– Select temperature setting “LO” for driver and front passenger.

Setting on heating control:

– A/C button and Rec or recirculate buttons should be pressed.

– Set rotary temperature control to Cold stop.

– Set rotary fresh air blower control to position 4.

- The radiator fan(s) should be running radiator fan - V7- (at least at speed 1).

Note

With some versions, the fan is not switched on until the pressure in the refrigerant circuit has exceeded a specified value.

- The fresh air blower - V2- should be running at maximum speed.
- The air flap for fresh air and air recirculation moves to the “recirculation” position or the air flow flap closes and the recirculation flap opens (within 1 minute of starting the vehicle).
- The coolant shut-off valve is closed.
- The valves for the pump valve unit are closed (and the coolant circulation pump is not pumping).

14.1.2 Checking pressures

– Switch off ignition.

– Connect the air conditioner service station ⇒ page 160 .

– Read pressures off pressure gauges; there may be two results.

Ambient temperature (in degrees C)	Pressure in the refrigerant circuit in bar positive pressure
+15°C	3.9
+20°C	4.7
+25°C	5.6
+30°C	6.7
+35°C	7.8
+40°C	9.1
+45°C	10.5

satelettronica

Note

- *The temperature of the components of the refrigerant circuit should be the same as the ambient temperature.*
- *If individual components of the refrigerant circuit are warmer or colder, the pressure will deviate from the values shown in the tables.*
- *Absolute pressure means that 0 bar corresponds to an absolute vacuum. The normal ambient pressure corresponds to 1 bar absolute pressure. On the scales of most pressure gauges, 0 bar corresponds to an absolute pressure of 1 bar (indicated by -1 bar mark below 0).*
- *Where vehicles have a high-pressure sender - G65- which indicates the measured pressure in the measured values block, the measured pressure should agree with the values in the tables.*

⇒ Rep. gr. 87

The pressure in the refrigerant circuit is lower than indicated in the table

Too little refrigerant in circuit.

– Check for leaks in the refrigerant circuit ⇒ page 60 .

– Check the high-pressure safety valve.

If the high-pressure safety valve has blown off:

– Check activation of radiator fan.

– Check refrigerant pipes and refrigerant hoses for restrictions in cross-section at bends that have too tight radius.

– Check refrigerant pipes and refrigerant hoses for external damage.

– If no defects are found, blow through refrigerant circuit with compressed air and nitrogen.

The pressure in the refrigerant circuit is equal to or greater than that in the table

– Start engine.

– On vehicles with electrical air conditioner compressor, switch off ignition.

Danger to life from high voltage

The high-voltage system is under high voltage. Damage to high-voltage components can result in severe or fatal injury from electric shock.

– Perform visual check of high-voltage components and high-voltage cables.

– Never use cutting or forming tools, or any other sharp-edged tools.

– Never use heat sources such as welding, brazing, soldering, hot air or thermal bonding equipment.

If repair work in the vicinity of high-voltage components and cables is necessary, carry out a visual check for damage on high-voltage components and cables ⇒ Electrical system; Rep. gr.

Protected by copyright. Copying for private or commercial purposes, in part or in whole, is not permitted unless authorised by Volkswagen AG. Volkswagen AG does not guarantee or accept any liability with respect to the correctness of information in this document. Copyright by Volkswagen AG.
satelettronica

93 ; General warning instructions for work on the high-voltage system .

If repair work on high-voltage components is necessary, de-energise the high-voltage system ⇒ Electrical system; Rep. gr. 93 ; De-energising high-voltage system , and “observe the general warning instructions for work on the high-voltage system” ⇒ Electrical system; Rep. gr. 93 ; General warning instructions for work on the high-voltage system .

– Set air conditioning system for maximum cooling output.

Note

If when connected to the air conditioner service station the low-pressure switch had been removed, bypass the electrical connections in the respective pressure measurement plug.

- The air conditioner compressor is driven by the engine via the air conditioning system magnetic clutch - N25- .
- The air conditioner compressor regulating valve - N280- is activated by the Climatronic control unit - J255- .

⇒ Rep. gr. 87

If the air conditioner compressor is not driven or the regulating valve not activated when the engine is running:

– Determine the cause, e.g. by reading the event memory for the air conditioning system, and rectify it.

– Observe the test prerequisites.

– Check power supply for air conditioning system magnetic clutch - N25- . If this is OK, repair magnetic clutch.

– Check actuation of air conditioner compressor regulating valve - N280- .

⇒ Rep. gr. 87 .

14.1.3 Continuation of checking pressures

◆ Where vehicles have a restrictor and reservoir, check these (with internally regulated air conditioning system compressor) ⇒ page 165 .

◆ Where vehicles have an expansion valve and receiver, check these (with internally regulated air conditioner compressor) ⇒ page 169 .

◆ Where vehicles have an expansion valve and receiver, check these (without internally regulated air conditioner compressor) ⇒ page 173 .

◆ Where vehicles have a restrictor and reservoir and air conditioning system compressor regulating valve - N280- (externally regulated air conditioning system compressor) ⇒ page 174 .

Protected by copyright. Copying for private or commercial purposes, in whole or in part, is not permitted unless authorised by Volkswagen AG. Volkswagen AG does not guarantee or accept any liability with respect to the correctness of information in this document. Copyright by Volkswagen AG.
satelettronica

14.2 Checking systems with a restrictor and collector (with internally regulated air conditioner compressor)

Note

- *Connect the air conditioner service station ⇒ page 160 .*
- *Observe the test prerequisites ⇒ page 161 .*

– Raise engine speed to 2000 rpm.

– Observe pressure gauge of the air conditioner service station .

Note

- *Switching pressures for refrigerant circuit switches are vehicle-specific.*
- *The connection with a valve for the low-pressure switch or on the evaporator should only be used where the vehicle does not have a service connection on the low-pressure side and access to the connection on the air conditioner compressor or reservoir is not possible (measurement accuracy). This only applies to certain vehicles.*

⇒ Rep. gr. 87

14.2.1 Specifications:

High-pressure side:

Rising from starting pressure (when pressure gauge is connected) to maximum 20 bar.

Low-pressure side:

Falling from starting pressure (when pressure gauge is connected) to diagram value.

A - High pressure (measured at the service connection) in bar positive pressure.

B - Low pressure (measured at the connection with the valve at the air conditioner compressor or at the reservoir) in bar positive pressure.

C - Permitted tolerance range.

D - Low pressure (measured at the connection with the valve for the low-pressure switch or at the service connection) in bar positive pressure.

E - Permitted tolerance range.

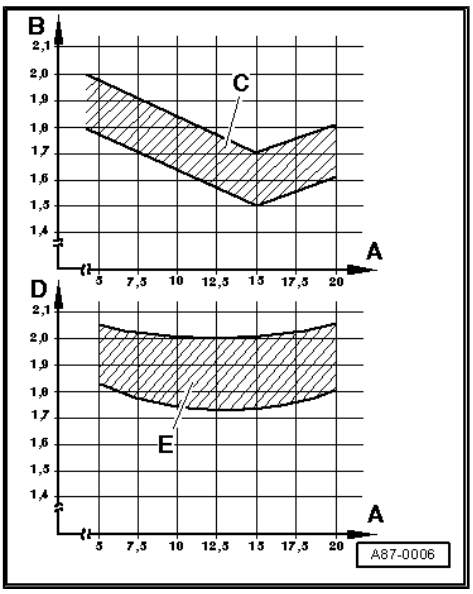

Protected by copyright. Copyright by Volkswagen AG.
Volkswagen AG does not guarantee or accept any liability with respect to the correctness of information in this document. Copyright by Volkswagen AG.
satelettronica

Possible deviation from specification	Possible cause of fault	Rectifying fault
• High pressure remains constant or increases only slightly (above the pressure measured when the engine is stopped). • Low pressure falls quickly to the diagram value or lower, • Required cooling output is not attained. • High pressure normal • Low pressure matches the diagram value, • Required cooling output is not attained. • High pressure normal • Low pressure is too low (see diagram), • Required cooling output is not attained.	Too little refrigerant in circuit.	– Look for leaks and rectify them. – Re-charge refrigerant circuit.

Note

If no fault can be found for this complaint, purge (clean) refrigerant circuit with refrigerant R134a *⇒ page 70* *. If this is not possible in your workshop, blow through refrigerant circuit with compressed air and dry with nitrogen* *⇒ page 68* *.*

Possible deviation from specification	Possible cause of fault	Rectifying fault
• High pressure only increases slightly above pressure with engine stopped, • Low pressure falls only slightly, • Required cooling output is not attained.	The air conditioner compressor is defective.	– Flush refrigerant circuit ⇒ page 70 . – Renew the air conditioner compressor.

Protected by copyright. Copying for private or commercial purposes, in part or in whole, is not permitted unless authorised by Volkswagen AG. Volkswagen AG does not guarantee or accept any liability with respect to the correctness of information in this document. Copyright by Volkswagen AG.
satelettronica

Possible deviation from specification	Possible cause of fault	Rectifying fault
• High pressure increases above specification • Low pressure falls quickly to the diagram value or lower, • Required cooling output is not attained.	Constriction or obstruction in refrigerant circuit	– Run hand over refrigerant circuit to check for differences in temperature. • At one component a temperature gradient will be detected: – If a hose or pipe is kinked or crushed, renew it. – Flush refrigerant circuit with compressed air and nitrogen in the event of an obstruction. – Repeat the check; if the system does not operate correctly. – Purge (clean) refrigerant circuit ⇒ page 70 .
• High pressure and low pressure are normal at first, but after a time, • The high pressure increases beyond the specified value, • The low pressure falls to the diagram value or lower, • The cooling power called for is not delivered.	Moisture in refrigerant circuit	– Blowing through refrigerant circuit with compressed air and nitrogen. – Renew receiver. – Repeat the check; if the system does not operate correctly. – Purge (clean) refrigerant circuit ⇒ page 70 . – Re-charge refrigerant circuit. – Repeat test.
• High pressure normal • Low pressure is too low (see diagram), • The cooling power required is delivered.	The air conditioner compressor is defective.	– Purge (clean) refrigerant circuit ⇒ page 70 . – Renew the air conditioner compressor.

Note

- *If the fault is "high pressure normal, low pressure too low " please note the following:*
- *In this case, the evaporator may be iced up or the low-pressure switch for air conditioning system - F73- has switched off the air conditioning system compressor, although the correct quantity of refrigerant is present in the refrigerant circuit.*

Protected by copyright. Copying for private or commercial purposes, in part or in whole, is not permitted unless authorised by Volkswagen AG. Volkswagen AG does not guarantee or accept any liability with respect to the correctness of information in this document. Copyright by Volkswagen AG.

satelettronica

Possible deviation from specification	Possible cause of fault	Rectifying fault
• High pressure normal or too high • Low pressure too high (see diagram), • The air conditioner compressor is noisy (especially immediately after being switched on), • Required cooling output is not attained.	Too much refrigerant in circuit.	– Extract some refrigerant from the refrigerant circuit. • If quantity of refrigerant extracted roughly corresponds to specified capacity: – Renew the air conditioner compressor. • The quantity of refrigerant extracted is significantly greater than the prescribed charge quantity. – Re-charge refrigerant circuit. – Repeat test.

Possible deviation from specification	Possible cause of fault	Rectifying fault
• High pressure and low pressure normal • Required cooling output is not attained. • High pressure and low pressure normal • The air conditioner compressor is noisy (especially immediately after being switched on), • The cooling power required is delivered.	Too much refrigerant oil in circuit.	– Drain refrigerant circuit. – Purge (clean) refrigerant circuit ⇒ page 70 .

Note

- *Overfilling with refrigerant oil can occur if the refrigerant oil level was not checked after the air conditioner compressor was renewed.*
- *If the air conditioner compressor is not to be replaced, drain refrigerant oil from air conditioner compressor via the block connections. From the total amount of refrigerant oil, fill 50 g direct into air conditioner compressor and fill remainder in refrigerant circuit according to ⇒ vehicle-specific workshop manual .*

Protected by copyright. Copying for private or commercial purposes, in part or in whole, is not permitted unless authorised by Volkswagen AG. Volkswagen AG does not guarantee or accept any liability with respect to the correctness of information in this document. Copyright by Volkswagen AG.
satelettronica

14.3 Checking systems with an expansion valve and reservoir (with internally regulated air conditioner compressor)

Note

- *Connect the air conditioner service station* *⇒ page 160* *.*
- *Observe the test prerequisites* *⇒ page 161* *.*

– Raise engine speed to 2000 rpm.

– Observe pressure gauge set.

Note

Switching pressures and design of refrigerant circuit switches are vehicle-specific.

Pressures must be measured at service connections; fitting locations of these connections are vehicle-specific.

➤ Rep. gr. 87

14.3.1 Specifications:

High-pressure side:

Rising from starting pressure (when pressure gauge is connected) to maximum 20 bar.

Low-pressure side:

Falling from starting pressure (when pressure gauge is connected) to diagram value.

A - High pressure in bar positive pressure.

B - Low pressure in bar positive pressure.

C - Permitted tolerance range.

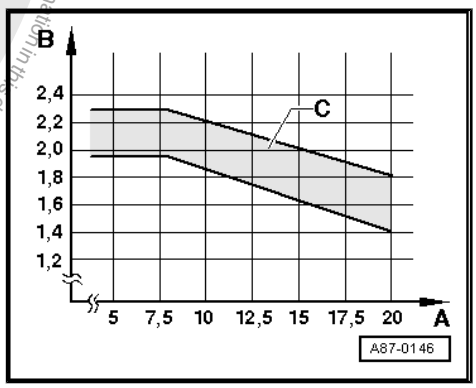

Protected by copyright. Copyright by Volkswagen AG.
Volkswagen AG does not guarantee or accept any liability with respect to the correctness of information in this document. Copyright by Volkswagen AG.
Reproduced in part or in whole is not permitted unless authorised by Volkswagen AG.
satelettronica

Possible deviation from specification	Possible cause of fault	Rectifying fault
• High pressure remains constant or increases only slightly (above the pressure measured when the engine is stopped). • Low pressure falls quickly to the diagram value or lower, • Required cooling output is not attained. • High pressure normal • Low pressure matches the diagram value, • Required cooling output is not attained.	Not enough refrigerant in circuit or expansion valve defective	– Extract some refrigerant from the refrigerant circuit. • If quantity of refrigerant extracted roughly corresponds to specified capacity: – Renew the expansion valve. – Re-charge refrigerant circuit. – Repeat test. • The quantity of refrigerant extracted is significantly less than the prescribed charge quantity. – Locate leak with leak detector and eliminate. – Re-charge refrigerant circuit. – Repeat test.

Note

If no fault can be determined and the function of the air conditioning system is not OK when the test is repeated, purge refrigerant circuit with refrigerant R134a (clean) ⇒ page 70 . If this is not possible in your workshop, blow through refrigerant circuit with compressed air and dry with nitrogen ⇒ page 68 .

Possible deviation from specification	Possible cause of fault	Rectifying fault
• High pressure increases above specification • Low pressure falls quickly to the diagram value or lower, • Required cooling output is not attained.	♦ Constriction or obstruction in refrigerant circuit ♦ Expansion valve defective	– Run hand over refrigerant circuit to check for differences in temperature. • At one component a temperature gradient will be detected: – If a hose or pipe is kinked or crushed, renew it. – In the event of an obstruction, flush refrigerant circuit with compressed air and nitrogen and replace expansion valve. • If no fault can be detected: – Purge (clean) refrigerant circuit ⇒ page 70 . – Repeat test.

Protected by copyright. Copying for private or commercial purposes, in part or in whole, is not permitted unless authorised by Volkswagen AG. Volkswagen AG does not guarantee or accept any liability with respect to the correctness of information in this document. Copyright by Volkswagen AG.
satelettronica

Note

If the air conditioning system is still not operating correctly after the refrigerant circuit has been purged with compressed air and nitrogen, the expansion valve must be renewed.

Possible deviation from specification	Possible cause of fault	Rectifying fault
• High and low pressure normal at first, • After a while, the high pressure increases beyond the specification, and the low pressure falls to the diagram value or lower, • The cooling power called for is not delivered.	♦ Expansion valve defective ♦ Moisture in refrigerant circuit	– Examine expansion valve for dirt or corrosion and replace if necessary – Blowing through refrigerant circuit with compressed air and nitrogen. – Renew receiver. – Repeat the check; if the system does not operate correctly. – Purge (clean) refrigerant circuit ⇒ page 70 . – Re-charge refrigerant circuit. – Repeat test.

Note

Always replace receiver if this fault occurs.

Protected by copyright. Copying for private or commercial purposes, in part or in whole, is not permitted unless authorised by Volkswagen AG. Volkswagen AG does not give any guarantee or accept any liability with respect to the correctness of information in this document. Copyright by Volkswagen AG.
satelettronica

Possible deviation from specification	Possible cause of fault	Rectifying fault
• High pressure normal or too high (see diagram), • Required cooling output is not attained. • The air conditioner compressor is noisy (especially immediately after being switched on),	♦ Too much refrigerant in circuit. ♦ Expansion valve or air conditioner compressor defective.	– Extract some refrigerant from the refrigerant circuit. • If quantity of refrigerant extracted roughly corresponds to specified capacity: – Renew the expansion valve. – Re-charge refrigerant circuit. – Repeat test. • The quantity of refrigerant extracted is significantly greater than the prescribed charge quantity. – Re-charge refrigerant circuit. – Repeat test.

Protected by copyright. Copyright by Volkswagen AG. Volkswagen AG does not accept any liability with respect to the correctness of information in this document. Copyright by Volkswagen AG. Volkswagen AG. Volkswagen AG. Commercial purposes, in part or in whole, is not permitted unless authorised by Volkswagen AG.

Note

If the air conditioning system is still not operating correctly when the test is repeated, refit the expansion valve and purge the refrigerant circuit with compressed air and nitrogen. Then replace the air conditioner compressor and receiver.

Possible deviation from specification	Possible cause of fault	Rectifying fault
• High pressure only increases slightly above pressure with engine stopped, • Low pressure falls only slightly, • The required cooling power is not delivered.	♦ The air conditioner compressor is defective.	– Flush refrigerant circuit ⇒ page 70 . – Replace the air conditioner compressor and receiver.

Possible deviation from specification	Possible cause of fault	Rectifying fault
• High pressure normal • Low pressure is too low (see diagram), • The cooling power required is delivered.	♦ Expansion valve or air conditioner compressor defective.	– Renew the expansion valve. – Re-charge refrigerant circuit. – Repeat test.

satelettronica

Note

- *If repeated check results in air conditioning system still not operating correctly, purge (clean) the refrigerant circuit* *⇒ page 70* *. Then replace the air conditioner compressor and receiver.*
- *In this case, the evaporator may ice up although the correct quantity of refrigerant is present in the refrigerant circuit.*

Possible deviation from specification	Possible cause of fault	Rectifying fault
• High pressure and low pressure normal • Required cooling output is not attained. • High pressure and low pressure normal • The air conditioner compressor is noisy (especially immediately after being switched on), • The cooling power required is delivered.	Too much refrigerant oil in circuit.	– Drain refrigerant circuit. – Purge (clean) refrigerant circuit ⇒ page 70 .

Note

- *Overfilling with refrigerant oil can occur if the refrigerant oil level was not checked after the air conditioner compressor was renewed.*
- *If the air conditioner compressor is not to be replaced, drain refrigerant oil from air conditioner compressor via the block connections. From the total amount of refrigerant oil, fill 50 g direct into air conditioner compressor and fill remainder in refrigerant circuit according to ⇒ vehicle-specific workshop manual .*

14.4 Checking systems with an expansion valve and reservoir (without regulated air conditioner compressor)

14.4.1 Conditions for testing

- Radiator and condenser clean (clean if necessary)
- The V-belt for air conditioner compressor and alternator is correctly tensioned.
- All air ducts, covers and seals are OK and properly installed.
- The flaps reach their end positions.
- Engine warm.
- The evaporator and heating do not draw any uncooled air at highest fresh air blower speed.

Protected by copyright. Copying for private and commercial purposes, in part or in whole, is not permitted unless authorised by Volkswagen AG. Volkswagen AG does not guarantee or accept any liability with respect to the correctness of information in this document. Copyright by Volkswagen AG.
satelettronica

With the engine running and the air conditioning system set to full power, check the following points:

- The fresh air blower is running.
- The radiator fan is running or is switched on.
- The fresh air and air recirculation flap is set to “recirculate”.
- Ambient temperature above 15°C.
- The temperature switch for evaporator - E33- is correctly fitted and its switching temperatures are correct.

14.4.2 Check

Check pressures in refrigerant circuit with ignition switched off.

– Check pressures in refrigerant circuit (using air conditioning service station) ⇒ page 162 .

Check pressures in refrigerant circuit with air conditioner compressor being driven.

– Connect the air conditioner service station ⇒ page 160 .

– Start engine.

– Raise engine speed to 2000 rpm.

– Observe pressure gauge of air conditioner service station .

– Check actual values against specifications ⇒ page 174 .

14.4.3 Specified values

High-pressure side

Pressure rising from initial pressure to 20 bar max.

Low-pressure side

Pressure falling from initial pressure to diagram value.

A - High pressure in bar positive pressure.

B - Low pressure in bar positive pressure.

C - Permitted tolerance range.

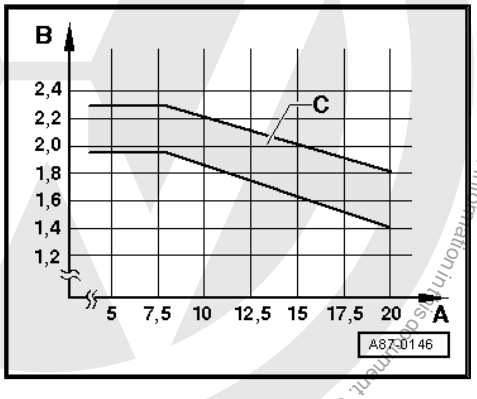

14.5 Checking systems with a restrictor and reservoir and air conditioner compressor regulating valve - N280- (with externally regulated air conditioner compressor)

Note

- *Connect the air conditioner service station* *⇒ page 160* *.*
- *Observe the test prerequisites* *⇒ page 161* *.*

– Raise engine speed to 2000 rpm.

satelettronica

– Observe pressure gauge of the air conditioner service station.

Note

Switching pressures for the air conditioner compressor regulating valve - N280- and the radiator fan - V7- are vehicle-specific.

⇒ Rep. gr. 87

14.5.1 Specifications:

High-pressure side:

Rising from starting pressure (when pressure gauge is connected) to 20 bar.

Protected by copyright. Copying for private or commercial purposes, in whole or in part, is not permitted unless authorised by Volkswagen AG. Volkswagen AG does not guarantee or accept any liability with respect to the correctness of information in this document. Copyright by Volkswagen AG.

satelettronica

Low-pressure side:

Falling from starting pressure (when pressure gauge is connected) to diagram value.

A - Low pressure (measured at the service connection) in bar absolute pressure.

B - Control current for the air conditioner compressor regulating valve - N280- .

C - Permitted tolerance range.

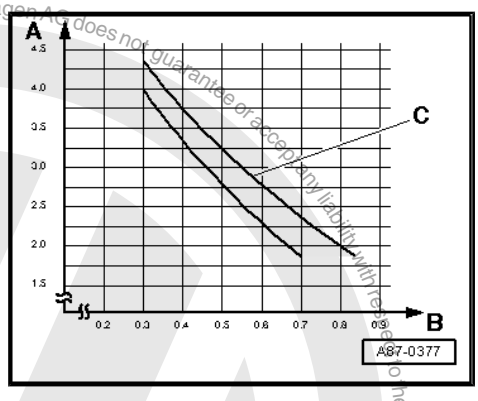

Note

- *Under unfavourable conditions (very high ambient temperatures, high atmospheric humidity), the pressure on the high pressure side can increase to a maximum of 29 bar.*
- *The control current -B- is indicated in the measured values block.*
- *The high pressure is indicated in the measured values block ⇒ Rep. gr. 87 .*
- *The low pressure is adjusted to within tolerances within the output range for the air conditioner compressor depending on the control current for the air conditioner compressor regulating valve - N280- .*
- *Under unfavourable conditions (very high ambient temperatures, high humidity), the output may not always be sufficient to attain the specified value.*
- *The set working current for the regulating valve must be greater than 0.3 A to ensure that the regulating valve is reliably activated.*
- *At the setting for "maximum cooling power", the control current should be approx. 0.8 A (indicated in the measured values block) ⇒ Rep. gr. 87 .*
- *Absolute pressure means that 0 bar corresponds to an absolute vacuum. The normal ambient pressure corresponds to 1 bar absolute. On the scales of most pressure gauges, 0 bar corresponds to an absolute pressure of 1 bar (indicated by -1 bar mark below 0).*

Volkswagen AG. Volkswagen AG does not guarantee or accept any liability with respect to the correctness of information in this document. Copyright by Volkswagen AG. Reproduction in whole, is not permitted unless authorised by Volkswagen AG. Copyright. Copyright. Reproduction for commercial purposes, distribution and making available to third parties prohibited.

satelettronica

Possible deviation from specification	Possible cause of fault	Rectifying fault
• High pressure remains constant or increases only slightly (above the pressure measured when the engine is stopped). • Low pressure falls quickly to the diagram value or lower, • Required cooling output is not attained. • High pressure normal • Low pressure matches the diagram value, • Required cooling output is not attained. • High pressure normal • Low pressure is too low (see diagram), • Required cooling output is not attained. • High pressure normal • Low pressure is too low (see diagram), • Required cooling output is not attained.	♦ Actuation of air conditioner compressor regulating valve - N280- is defective. ♦ Too little refrigerant in circuit.	– Check actuation of air conditioner compressor regulating valve - N280- . – Locate leak with leak detector and eliminate. – Re-charge refrigerant circuit.

Note

If no fault can be found for this complaint, purge (clean) refrigerant circuit with refrigerant R134a ⇒ page 70 *. If this is not possible in your workshop, blow through refrigerant circuit with compressed air and dry with nitrogen* ⇒ page 68 *.*

Protected by copyright. Copying for private or commercial purposes, in part or in whole, is not permitted unless authorised by Volkswagen AG. Volkswagen AG does not guarantee or accept any liability with respect to the correctness of information in this document. Copyright by Volkswagen AG.
satelettronica

Possible deviation from specification	Possible cause of fault	Rectifying fault
• High pressure only increases slightly above pressure with engine stopped, • Low pressure falls only slightly, • Required cooling output is not attained.	♦ Actuation of air conditioner compressor regulating valve - N280- is defective. ♦ The air conditioner compressor is defective.	– Check actuation of air conditioner compressor regulating valve - N280- . – Purge (clean) refrigerant circuit ⇒ page 70 . – Renew the air conditioner compressor.
• High pressure increases above specification • Low pressure falls only slightly, • Required cooling output is not attained.	♦ Constriction or obstruction in refrigerant circuit	– Run hand over refrigerant circuit to check for differences in temperature. • At one component a temperature gradient will be detected: – If a hose or pipe is kinked or crushed, renew it. – Flush refrigerant circuit with compressed air and nitrogen in the event of an obstruction. • If no fault is found: – Purge (clean) refrigerant circuit ⇒ page 70 .
• High pressure and low pressure are normal at first, but after a while, the high pressure increases beyond the specification, • The low pressure falls to the diagram value or lower, • The cooling power called for is not delivered.	♦ Moisture in refrigerant circuit	– Blowing through refrigerant circuit with compressed air and nitrogen. – Renew reservoir. – Repeat the check; if the system does not operate correctly. – Purge (clean) refrigerant circuit ⇒ page 70 . – Re-charge refrigerant circuit. – Repeat test.

Protected by copyright. Copying for private or commercial purposes, in part or in whole, is not permitted unless authorised by Volkswagen AG. Volkswagen AG does not guarantee or assume any liability with respect to the correctness of information in this document. Copyright by Volkswagen AG.

satelettronica

Possible deviation from specification	Possible cause of fault	Rectifying fault
• High pressure normal • Low pressure is too low (see diagram), • The cooling power required is delivered.	♦ Actuation of air conditioner compressor regulating valve - N280- is defective. ♦ The air conditioner compressor is defective.	– Check actuation of air conditioner compressor regulating valve - N280- . – Purge (clean) refrigerant circuit ⇒ page 70 . – Renew the air conditioner compressor.

Note

♦ *If the fault is "high pressure normal, low pressure too low" note the following: if faulty the evaporator could ice up or the required cooling output is not delivered.*

♦ *In this case, the evaporator may ice up although the correct quantity of refrigerant is present in the refrigerant circuit.*

♦ *Check the measured value of the evaporator output temperature sender - G263- or evaporator temperature sensor - G308- .*

♦ *Check the actuation of the air conditioner compressor regulating valve - N280- .*

⇒ Rep. gr. 87

Possible deviation from specification	Possible cause of fault	Rectifying fault
• High pressure normal or too high • Low pressure too high (see diagram), • The air conditioner compressor is noisy (especially immediately after being switched on), • Required cooling output is not attained.	♦ Too much refrigerant in circuit.	– Extract some refrigerant from the refrigerant circuit. • The quantity of refrigerant extracted is about equal to the prescribed charge quantity: – Renew the air conditioner compressor. • The quantity of refrigerant extracted is significantly greater than the prescribed charge quantity: – Re-charge refrigerant circuit. – Repeat test.
• High pressure and low pressure normal • Required cooling output is not attained.	♦ Too much refrigerant oil in circuit.	– Drain refrigerant circuit. – Purge (clean) refrigerant circuit ⇒ page 70 .

Copyright by Volkswagen AG. Volkswagen AG does not guarantee or accept any liability with respect to the correctness of information in this document. Copyright by Volkswagen AG. Licensed by copyright. Copying for private or commercial purposes, in part or in whole, is not permitted unless authorised by Volkswagen AG.
satelettronica

Possible deviation from specification	Possible cause of fault	Rectifying fault
• High pressure and low pressure normal • The air conditioner compressor is noisy (especially immediately after being switched on), • The cooling power required is delivered.		

Note

- *Overfilling with refrigerant oil can occur if the refrigerant oil level was not checked after the air conditioner compressor was renewed.*
- *If the air conditioner compressor is not to be replaced, drain refrigerant oil from air conditioner compressor via the block connections. From the total amount of refrigerant oil, fill 50 g direct into air conditioner compressor and fill remainder in refrigerant circuit according to ⇒ vehicle-specific workshop manual .*

14.6 Checking systems with an expansion valve, receiver and air conditioner compressor regulating valve - N280- (with externally regulated air conditioner compressor)

Note

- *Connect the air conditioner service station ⇒ page 160 .*
- *Observe the test prerequisites ⇒ page 161 .*

– Raise engine speed to 2000 rpm.

– Observe pressure gauge of the air conditioner service station.

Note

- *Switching pressures for the air conditioner compressor regulating valve - N280- and the radiator fan - V7- are vehicle-specific.*
- *Pressures should be measured at the service connections; the location of these connections is vehicle-specific ⇒ Rep. gr. 87 .*

14.6.1 Specifications:

High-pressure side:

Rising from starting pressure (when pressure gauge is connected) to 20 bar.

Protected by copyright. Copyright by Volkswagen AG. Volkswagen AG does not guarantee or accept any liability with respect to the correctness of information in this document. Copyright by Volkswagen AG. Not to be authorised for private or commercial purposes, in part or in whole, is not permitted.

satelettronica

Low-pressure side:

Falling from starting pressure (when pressure gauge is connected) to diagram value.

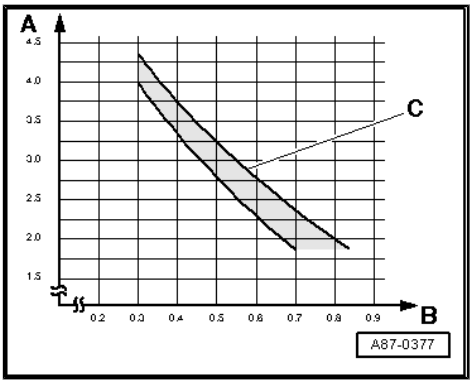

A - Low pressure (measured at the service connection) in bar absolute pressure.

B - Control current for the air conditioner compressor regulating valve - N280- .

C - Permitted tolerance range.

Note

- *Under unfavourable conditions (very high ambient temperatures, high atmospheric humidity), the pressure on the high pressure side can increase to a maximum of 29 bar.*
- *The control current -B- is indicated in the measured values block.*
- *The high-pressure value measured by the high-pressure sender - G65- is indicated in the measured values block ⇒ Rep. gr. 87 .*
- *The low pressure is adjusted to within tolerances within the output range for the air conditioner compressor depending on the control current for the air conditioner compressor regulating valve - N280- .*
- *Under unfavourable conditions (very high ambient temperatures, high humidity), the output may not always be sufficient to attain the specified value.*
- *The set working current for the regulating valve must be greater than 0.3 A to ensure that the regulating valve is reliably activated.*
- *At the setting "maximum cooling power", the control current should be approx. 0.65 A to 0.8 A (vehicle-specific, indicated in the measured values block) ⇒ Rep. gr. 87 .*
- *Absolute pressure means that 0 bar corresponds to an absolute vacuum. The normal ambient pressure corresponds to 1 bar absolute. On the scales of most pressure gauges, 0 bar corresponds to an absolute pressure of 1 bar (indicated by -1 bar mark below 0).*

Protected by copyright. Copyright by Volkswagen AG. Volkswagen AG does not guarantee or accept any liability with respect to the correctness of information in this document. Copyright by Volkswagen AG.
satelettronica

Possible deviation from specification	Possible cause of fault	Rectifying fault
• High pressure remains constant or increases only slightly (above the pressure measured when the engine is stopped). • Low pressure falls quickly to the diagram value or lower. • Required cooling output is not attained.	♦ Actuation of air conditioner compressor regulating valve - N280- is defective. ♦ Too little refrigerant in circuit.	– Check actuation of air conditioner compressor regulating valve - N280- . – Locate leak with leak detector and eliminate. – Re-charge refrigerant circuit.
• High pressure normal. • Low pressure matches the diagram value. • Required cooling output is not attained.		
• High pressure normal. • Low pressure is too low (see diagram). • Required cooling output is not attained.	• Too little refrigerant in circuit.	– Extract some refrigerant from the refrigerant circuit. • The quantity of refrigerant extracted is significantly less than the prescribed charge quantity. – Locate leak with leak detector, eliminate. – Re-charge refrigerant circuit. – Repeat test. • If quantity of refrigerant extracted roughly corresponds to specified capacity:

Protected by copyright. Copyright by Volkswagen AG. Volkswagen AG does not guarantee or accept any liability with respect to the correctness of information in this document. Copying for private or commercial purposes, in part or in whole, is not permitted unless authorized by Volkswagen AG.

satelettronica

Possible deviation from specification	Possible cause of fault	Rectifying fault
	• Expansion valve defective	– Renew the expansion valve. – Re-charge refrigerant circuit. – Repeat test.

Note

- *If no fault can be found for this complaint, purge (clean) refrigerant circuit with refrigerant R134a* *⇒ page 70* *. If this is not possible in your workshop, blow through refrigerant circuit with compressed air and dry with nitrogen* *⇒ page 68* *.*
- *Check the measured values of the evaporator output temperature sender - G263- or evaporator temperature sensor - G308- and actuation of the air conditioner compressor regulating valve - N280- . If the measured value of the evaporator output temperature sender - G263- or the evaporator temperature sender - G308- is faulty, the evaporator may ice up or the cooling output will not be achieved.*
- *If a repeat test after the expansion valve has been renewed indicates that the air conditioning system is still not operating correctly, refit the expansion valve and flush the refrigerant circuit with compressed air and nitrogen. Then replace the air conditioner compressor and receiver.*
- *In this case, the evaporator may ice up although the correct quantity of refrigerant is present in the refrigerant circuit.*
- *If the expansion valve is defective (always closed or not opening wide enough) the air conditioner compressor regulating valve - N280- will be set to maximum power and the low-pressure value will fall to the diagram value or less (the air conditioner compressor is drawing the refrigerant out of the low-pressure side). However, since no refrigerant can flow through the expansion valve, the required cooling power is not delivered, and it can be that the high-pressure value does not rise at all or not enough, since no energy exchange is occurring.*

Possible deviation from specification	Possible cause of fault	Rectifying fault
• High pressure only increases slightly above pressure with engine stopped. • Low pressure falls only slightly. • Required cooling output is not attained.	♦ Actuation of air conditioner compressor regulating valve - N280- is defective.	– Check actuation of air conditioner compressor regulating valve - N280- .

Protected by copyright. Copying for private or commercial purposes, in any form and by any means is prohibited without the authorised permission of Volkswagen AG. Volkswagen AG does not guarantee or accept any liability with respect to the correctness of information in this document. Copyright by Volkswagen AG.
satelettronica

Possible deviation from specification	Possible cause of fault	Rectifying fault
	♦ The air conditioner compressor is defective.	– Extract refrigerant. – Purge (clean) refrigerant circuit ⇒ page 70 . – Renew the air conditioner compressor. – Re-charge refrigerant circuit.
• High pressure increases above specification. • Low pressure falls quickly to the diagram value or lower. • Required cooling output is not attained.	♦ Actuation of air conditioner compressor regulating valve - N280- is defective.	– Check actuation of air conditioner compressor regulating valve - N280- .
	♦ Constriction or obstruction in refrigerant circuit	– Run hand over refrigerant circuit to check for differences in temperature. • At one component a temperature gradient will be detected: – If a hose or pipe is kinked or crushed, renew it. – Flush refrigerant circuit with compressed air and nitrogen in the event of an obstruction. – Re-charge refrigerant circuit. – Repeat test. • If no fault is found: – Purge (clean) refrigerant circuit ⇒ page 70 . – Re-charge refrigerant circuit. – Repeat the check; if the system does not operate correctly.
	♦ Expansion valve defective	– Extract refrigerant. – Renew the expansion valve and receiver. – Re-charge refrigerant circuit.

Protected by copyright. Copying for private or commercial purposes, in part or in whole, is not permitted unless authorised by Volkswagen AG. Volkswagen AG does not guarantee or accept any liability with respect to the correctness of information in this document. Copyright by Volkswagen AG.

satelettronica

Note

- *In this case, the evaporator may ice up although the correct quantity of refrigerant is present in the refrigerant circuit.*
- *If the expansion valve is defective (always closed or not opening wide enough) the air conditioner compressor regulating valve - N280- will be set to maximum power and the low-pressure value will fall to the diagram value or less (the air conditioner compressor is drawing the refrigerant out of the low-pressure side). However, since no refrigerant can flow through the expansion valve, the required cooling power is not delivered, and it can be that the high-pressure value does not rise at all or not enough, since no energy exchange is occurring.*

Possible deviation from specification	Possible cause of fault	Rectifying fault
• High pressure and low pressure are normal at first, but after a while, the high pressure increases beyond the specification. • After a time, the low pressure falls to the diagram value or lower. • The cooling power called for is not delivered.	♦ Actuation of air conditioner compressor regulating valve - N280- is defective.	– Check actuation of air conditioner compressor regulating valve - N280- .
• High pressure and low pressure are normal at first, but after a longer drive, the low pressure falls to below the specification (evaporator iced up).	♦ Moisture in refrigerant circuit	– Extract refrigerant. – Blowing through refrigerant circuit with compressed air and nitrogen. – Renew receiver together with dryer. – Evacuate refrigerant circuit for at least 3 hours. – Re-charge refrigerant circuit. – Repeat the check; if the system does not operate correctly. – Purge (clean) refrigerant circuit ⇒ page 70 . – Re-charge refrigerant circuit. – Repeat test.

Protected by copyright. Copying for private or commercial purposes, in part or in whole, is not permitted unless authorised by Volkswagen AG. Volkswagen AG does not guarantee or accept any liability with respect to the correctness of information in this document. Copyright by Volkswagen AG.

satelettronica

Note

- *If this complaint occurs after a longer period of operation or only occasionally (the low pressure falls below the specification and the evaporator ices up) it is sufficient only to renew the dryer (fitted within the receiver). Check the quantity of refrigerant oil. Refrigerant circuit is then to be evacuated for at least 3 hours.*
- *In case of this complaint, it is not initially necessary to purge the refrigerant circuit with compressed air and nitrogen, since as a rule only a small quantity of moisture will have accumulated in the system, which can be removed by a longer evacuation period.*
- *In this case, the evaporator may ice up although the correct quantity of refrigerant is present in the refrigerant circuit.*

Possible deviation from specification	Possible cause of fault	Rectifying fault
• High pressure normal, low pressure too low (see diagram), and the cooling performance is attained.	♦ Actuation of air conditioner compressor regulating valve - N280- is defective.	– Check actuation of air conditioner compressor regulating valve - N280- .
	♦ Expansion valve defective	– Extract refrigerant. – Purge (clean) refrigerant circuit ⇒ page 70 . – Renew the expansion valve and receiver. – Re-charge refrigerant circuit. – Repeat the check; if the system does not operate correctly. – Renew the air conditioner compressor.
	♦ The air conditioner compressor is defective.	– Extract refrigerant. – Purge (clean) refrigerant circuit ⇒ page 70 . – Renew the air conditioner compressor. – Re-charge refrigerant circuit. – Repeat test.

Protected by copyright. Copying for private or commercial purposes, in part or in whole, is not permitted unless authorised by Volkswagen AG. Volkswagen AG does not guarantee or accept any liability with respect to the correctness of information in this document. Copyright by Volkswagen AG.
satelettronica

Note

- *If the fault is "high pressure normal, low pressure too low" note the following: if faulty the evaporator could ice up or the required cooling output is not delivered.*
- *In this case, the evaporator may ice up although the correct quantity of refrigerant is present in the refrigerant circuit.*
- *Check the measured values of the evaporator output temperature sender - G263- or evaporator temperature sensor - G308- and actuation of the air conditioner compressor regulating valve - N280- . If the measured value at the high-pressure sender - G65- is faulty, the evaporator can ice up or the required cooling power is not delivered.*
- *If the defect is in the air conditioner compressor regulating valve - N280- (the regulating valve is not activated, but the air conditioner compressor still runs), it is not necessary to blow through the refrigerant circuit. If this fault occurs, it is sufficient to renew the air conditioner compressor (check the refrigerant oil quantity in the air conditioner compressor).*
- *If the expansion valve is defective (always closed or not opening wide enough) the air conditioner compressor regulating valve - N280- will be set to maximum power and the low-pressure value will fall to the diagram value or less (the air conditioner compressor is drawing the refrigerant out of the low-pressure side). However, since no refrigerant can flow through the expansion valve, the required cooling power is not delivered, and it can be that the high-pressure value does not rise at all or not enough, since no energy exchange is occurring.*

⇒ Rep. gr. 87

Possible deviation from specification	Possible cause of fault	Rectifying fault
• High pressure normal or too high. • Low pressure too high (see diagram). • The air conditioner compressor is noisy (especially immediately after being switched on). • Required cooling output is not attained.	♦ Actuation of air conditioner compressor regulating valve - N280- is defective. ♦ Too much refrigerant in circuit.	– Check actuation of air conditioner compressor regulating valve - N280- . – Extract some refrigerant from the refrigerant circuit. • The quantity of refrigerant extracted is about equal to the prescribed charge quantity: – Renew the air conditioner compressor. • The quantity of refrigerant extracted is significantly greater than the prescribed charge quantity: – Re-charge refrigerant circuit. – Repeat test.

Protected by copyright. Copying for private or commercial purposes, in part or in whole, is not permitted unless authorised by Volkswagen AG. Volkswagen AG does not guarantee or accept any liability with respect to the correctness of information in this document. Copyright by Volkswagen AG.

satelettronica

Protected by copyright. Copying for private or commercial purposes, in part or in whole, is not permitted unless authorised by Volkswagen AG. Volkswagen AG does not guarantee or accept any liability with respect to the correctness of information in this document. Copyright by Volkswagen AG.

Possible deviation from specification	Possible cause of fault	Rectifying fault
	♦ Too much refrigerant oil in circuit.	– Drain refrigerant circuit. • If quantity of refrigerant extracted roughly corresponds to specified capacity: – Purge (clean) refrigerant circuit ⇒ page 70 . – Re-charge refrigerant circuit. – Repeat test.
	♦ Expansion valve defective	– Drain refrigerant circuit. – Renew the expansion valve and receiver. – Re-charge refrigerant circuit. – Repeat the check; if the system does not operate correctly. – Renew the air conditioner compressor.
	♦ The air conditioner compressor is defective.	– Drain refrigerant circuit. – Purge (clean) refrigerant circuit ⇒ page 70 . – Renew the air conditioner compressor. • The quantity of refrigerant extracted is significantly greater than the prescribed charge quantity. – Re-charge refrigerant circuit. – Repeat test.

satelettronica

Note

- *If the defect is in the air conditioner compressor regulating valve - N280- (the regulating valve is not activated, but the air conditioner compressor still runs), it is not necessary to blow through the refrigerant circuit. If this fault occurs, it is sufficient to renew the air conditioner compressor (check the refrigerant oil quantity in the air conditioner compressor).*
- *Overfilling with refrigerant oil can occur if the refrigerant oil level was not checked after the air conditioner compressor was renewed.*
- *If the air conditioner compressor is not to be replaced, drain refrigerant oil from air conditioner compressor via the block connections. From the total amount of refrigerant oil, fill 50 g direct into air conditioner compressor and fill remainder in refrigerant circuit according to ⇒ vehicle-specific workshop manual .*
- *If the expansion valve is defective (always closed or not opening wide enough) the air conditioner compressor regulating valve - N280- will be set to maximum power and the low-pressure value will fall to the diagram value or less (the air conditioner compressor is drawing the refrigerant out of the low-pressure side). However, since no refrigerant can flow through the expansion valve, the required cooling power is not delivered, and it can be that the high-pressure value does not rise at all or not enough, since no energy exchange is occurring.*

Possible deviation from specification	Possible cause of fault	Rectifying fault
• High pressure and low pressure are normal. • Required cooling output is not attained.	♦ Actuation of air conditioner compressor regulating valve - N280- is defective. ♦ Too much refrigerant oil in circuit.	– Check actuation of air conditioner compressor regulating valve - N280- . – Purge (clean) refrigerant circuit ⇒ page 70 .
• High pressure and low pressure are normal. • The air conditioner compressor is noisy (especially immediately after being switched on). • The cooling power required is delivered.	♦ Too much refrigerant oil in circuit.	– Drain refrigerant circuit. – Purge (clean) refrigerant circuit ⇒ page 70 . – Re-charge refrigerant circuit. – Repeat test.
	♦ Expansion valve defective	– Renew the expansion valve.

Protected by copyright. Copying for private or commercial purposes, in part or whole, is not permitted unless authorised by Volkswagen AG. Volkswagen AG does not guarantee or accept any liability with respect to the correctness of information in this document. Copyright by Volkswagen AG.

satelettronica

Note

- *Overfilling with refrigerant oil can occur if the refrigerant oil level was not checked after the air conditioner compressor was renewed.*
- *If the air conditioner compressor is not to be replaced, drain refrigerant oil from air conditioner compressor via the block connections. From the total amount of refrigerant oil, fill 50 g direct into air conditioner compressor and fill remainder in refrigerant circuit according to ⇒ vehicle-specific workshop manual .*
- *If the expansion valve is defective (always open) the evaporator temperature will no longer be regulated so that only gaseous refrigerant exits the evaporator. It is then possible that under certain operating conditions, drops of liquid will be drawn into the air conditioner compressor, which will hen cause noise (because liquid is incompressible).*

14.7 With expansion valve, receiver and electrical air conditioner compressor

Note

The electrical air conditioner compressor does not have an air conditioner compressor regulating valve - N280- . Regulation takes place via the speed of the air conditioner compressor. The air conditioner compressor contains the control electronics and a G-supercharger that impels the refrigerant.

Protected by copyright. Copying for private or commercial purposes, in part or in whole, is not permitted unless authorised by Volkswagen AG. Volkswagen AG does not guarantee or accept any liability with respect to the correctness of information in this document. Copyright by Volkswagen AG.
satelettronica

15 Renewing components

- All components of the refrigerant circuit submitted for quality monitoring must always be sealed (use the original sealing caps from the genuine part).
- The genuine parts of air conditioner compressor, reservoir, receiver, evaporator and condenser are charged with nitrogen before shipment. This filling is being gradually discontinued, or the pressure of the nitrogen filling is so low that escaping gas is no longer perceptible when the part is initially opened.
- Where vehicles are fitted with an air conditioner compressor without a magnetic clutch, the engine should be started only when the refrigerant circuit has been fully assembled (since the air conditioner compressor will always run when the engine is running) ⇒ page 18 .
- The air conditioner compressor with air conditioner compressor regulating valve - N280- (without magnetic clutch) has an internal oil circuit to ensure that the air conditioner compressor is not damaged when the refrigerant circuit is empty. This means that approx. 40 to 50 cm^3 of refrigerant oil remain in the air conditioner compressor ⇒ page 18 .

Note

- ♦ *Since genuine parts are sometimes stored for long periods in various places, it can well be that gas will escape from some parts when first opened but not from others (even among those having the same part number). Therefore, be careful when unscrewing the sealing caps from the genuine part connections and allow the nitrogen gas to escape slowly.*
- ♦ *Either a restrictor with a reservoir or an expansion valve with a receiver is built into the refrigerant circuit.*
- ♦ *Seal open connections and pipes (to prevent absorption of moisture).*
- ♦ *Always renew the restrictor.*

The reservoir / receiver or desiccant bag / cartridge need not be renewed under the following circumstances.

- After an accident in which there was no damage to the reservoir or receiver.
- Repairs are performed quickly (no more delay than during a normal repair time) and there was no moisture intrusion. The vehicle is no more than 5 years old.

The reservoir or receiver or dryer cartridge should be renewed under the following circumstances>

- The refrigerant circuit was opened and the vehicle is more than 5 years old.
- The refrigerant circuit has been opened for in indeterminate period (seepage leak).
- Repairs take longer than a normal repair time and there has been moisture intrusion.
- Always renew collector/reservoir or dryer cartridge after blowing through with compressed air or purging with refrigerant R134a. Keep genuine parts sealed for as long as possible to keep the ingress of moisture as low as possible.
- The air conditioner compressor seizes.

Protected by copyright. Copying for private or commercial purposes, in part or in whole, is not permitted unless authorised by Volkswagen AG. Volkswagen AG does not guarantee or accept any liability with respect to the correctness of information in this document. Copyright by Volkswagen AG.

sateletronica

- The reservoir or receiver is damaged (e.g. in an accident).

CAUTION

Risk of chemical burns from atomised refrigerant oil. Eyes and other parts of the body could be injured.

- **Wear protective gloves.**
- **Wear safety goggles.**
- **Never inhale atomised refrigerant oil.**

15.1 In the event of leaking or damaged components (apart from the air conditioner compressor, receiver or reservoir)

15.1.1 If the refrigerant circuit was completely empty

- Remove defective part.
- Remove air conditioner compressor.* ⇒ Heating, air conditioning; Rep. gr. 87 ; Air conditioner compressor; Removing and installing air conditioner compressor .

Protected by copyright. Copyright by Volkswagen AG.
Volkswagen AG does not accept any liability with respect to the correctness of information in this document. Copyright by Volkswagen AG.
Reproduced or transmitted in whole or in part for commercial purposes, in part

satelettronica

– Unscrew oil drain plug -B- / -D- from air conditioner compressor -A-.*

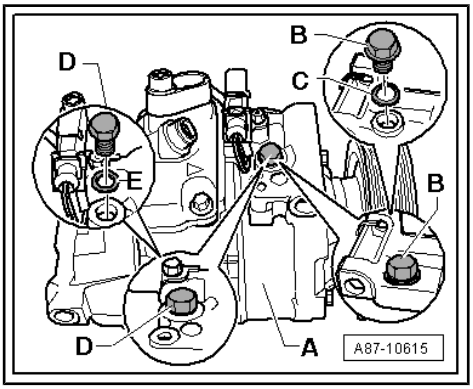

Note

- *The design of the oil drain plug -B- / -D- and seal -C- / -E- may vary (depending on the manufacturer of the air conditioner compressor) ⇒ Heating, air conditioning; Rep. gr. 87 ; Air conditioner compressor (vehicle-specific workshop manual).*
- *When installing the oil drain plug -B-/-D-, observe the corresponding torque specification (depending on the manufacturer of the air conditioner compressor and the design of the oil drain plug). Please note that the oil drain plug of air conditioner compressors manufactured by "Denso" and "Delphi" is equipped with an oil seal ⇒ Heating, Air conditioning; Rep. gr. 87 ; Air conditioning compressor, Assembly overview - drive unit of air conditioner compressor (currently valid specified torque: 30 Nm for "Denso" and 15 Nm for "Delphi" compressors). The oil drain plug of air conditioner compressors manufactured by "Sanden" and "Zexel- / Valeo" may be equipped with an O-ring or an oil seal (depending on the vehicle equipment; currently valid specified torque: 10 Nm, respectively).*
- *On the Denso air conditioner compressor, for example, the oil drain plug -D- has an oil seal -E-; renew ⇒ Heating, air conditioning; Rep. gr. 87 ; Air conditioner compressor (vehicle-specific workshop manual) and ⇒ Electronic parts catalogue .*
- *On the Sanden air conditioner compressor, for example, the oil drain plug -B- has a seal -C-; renew ⇒ Heating, air conditioning; Rep. gr. 87 ; Air conditioner compressor (vehicle-specific workshop manual) and ⇒ Electronic parts catalogue .*
- *If a seal (oil seal or O-ring) fitted to the oil drain plug is not available as a replacement part, the removed old part can be reused (as an exception to the general rule of using new seals only). The old seal, however, must always be checked for damage prior to installation. If any damage or deformation is detected on the old seal, it must be renewed with a commercially available new part.*
- *After filling the refrigerant circuit, check the installed oil drain plug for leaks using e.g. an electronic leak detector.*
- *To speed up draining of the refrigerant oil, rotate the shaft of the air conditioner compressor e.g. using the belt pulley or the magnetic clutch pulley.*

Protected by copyright. Copyright by Volkswagen AG. Volkswagen AG does not guarantee or accept any liability with respect to the correctness of information in this document. Copyright by Volkswagen AG.
satelettronica

Note

- *To speed up the draining of the refrigerant oil, rotate the shaft of the air conditioner compressor by hand using the poly V-belt pulley or the magnetic clutch.*
- *Pour old refrigerant oil out of air conditioner compressor, handling refrigerant oil ⇒ Volkswagen ServiceNet; Service handbook; Environmental protection; Waste disposal; Current situation; Disposal channels; Disposal of used oils; Refrigerant oils .*
- *Then fill the air conditioner compressor with the quantity of new refrigerant oil corresponding to the quantity in a genuine air conditioner compressor ⇒ Rep. gr. 87 .*
- *Different types and quantities of refrigerant oils are required for different air conditioner compressors ⇒ Rep. gr. 87 .*
- *To ensure proper lubrication of the air conditioner compressor when it runs for the first time, the air conditioner compressor must be filled with at least 80 cm³ of refrigerant oil; the remainder can be poured into the new reservoir or receiver ⇒ Rep. gr. 87 .*
- *If dirt enters the air conditioner compressor whilst the refrigerant circuit is open (e.g. after an accident), the air conditioner compressor should be renewed.*
- *Blow through refrigerant circuit with compressed air and remove moisture with nitrogen ⇒ page 68 .*

– Replace receiver or reservoir and restrictor.

– Assemble the refrigerant circuit, evacuate it and charge it.

15.1.2 If there is still refrigerant in the refrigerant circuit

– Drain refrigerant circuit.

– Remove the defective part, blow through with compressed air and collect any escaping refrigerant oil.

– The refrigerant oil that is blown out (plus 20 cm³ for the evaporator, plus 10 cm³ for the condenser, refrigerant lines and refrigerant hoses) should be poured into the new component as fresh refrigerant oil.

– Replace restrictor. Depending on vehicle.

– Assemble, evacuate and charge refrigerant circuit.

15.2 Renew the air conditioner compressor

Note

On vehicles equipped with an electrical air conditioner compressor, de-energise the high-voltage system before removing the air conditioner compressor. ⇒ Electric drive; Rep. gr. 93 ; Electric drive; De-energising high-voltage system

15.2.1 Without needing to flush refrigerant circuit of contaminants (cleaning), e.g. in

Volkswagen AG does not guarantee or accept any liability with respect to the correctness of information in this document. Copyright by Volkswagen AG.
Copyright by Volkswagen AG. Not to be republished in any form without prior written consent. Not to be sold or distributed for commercial purposes, nor to be published on any other website, is not to be revised or altered in any way, and must be kept in its entirety.
satelettronica

cases of external damage after an accident

– Drain refrigerant circuit.
– Remove air conditioner compressor.

Note

If a different air conditioner compressor with other refrigerant oil is fitted, purge the refrigerant circuit with R134a refrigerant *⇒ page 70* *.*

Electrical air conditioner compressor

If an electrical air conditioner compressor is renewed without having a mechanical fault (e.g. defective printed circuit board), the amount of refrigerant oil from this electrical air conditioner compressor must be determined.

Note

- *The air conditioner compressor must be purged in order to extract the refrigerant oil which needs to be determined.*
- *Purge the air conditioner compressor in normal direction of flow (from low-pressure inlet to high-pressure outlet).*
- *In order to purge as much refrigerant oil from the air conditioner compressor as possible make sure that the high-pressure outlet of the air conditioner compressor is in the lowest position possible.*
- *If an air conditioning service station without purging programme is used, the sequence has to be carried out manually (evacuate, purge 3 times with at least 2 kg of refrigerant each time and extract refrigerant again, evacuate).*

Determined amount e.g. 50 cm³

Then, remove as much refrigerant oil from the new air conditioner compressor as is necessary to ensure that only the same amount of refrigerant oil which has been purged from the old air conditioner compressor remains in the new one (plus 10 cm ^{3}). If, for example, the new original air conditioner compressor is filled with e.g. 200 cm^3 of refrigerant oil, then remove only 140 cm^3.

– Pour old refrigerant oil out of air conditioner compressor. Handling refrigerant ⇒ Volkswagen ServiceNet; Service handbook; Environmental protection; Waste disposal; Current situation; Disposal channels; Disposal of used oils; Refrigerant oils .

Note

If the amount of refrigerant oil which can be removed from the new air conditioner compressor is not sufficient, the new air conditioner compressor must be purged. After the new air conditioner compressor has been purged, fill the amount of refrigerant oil which has been determined when purging the old air conditioner compressor.

Mechanically driven air conditioner compressor: Drain refrigerant oil via block connections.

Reproduced by copyright by Volkswagen AG. Volkswagen AG does not guarantee or accept any liability with respect to the correctness of information in this document. Copyright by Volkswagen AG.
For commercial purposes or for use not permitted under the Volkswagen AG terms of use, please contact Volkswagen AG.
satelettronica

– To speed up the draining of the refrigerant oil, rotate the shaft of the air conditioner compressor using the magnetic clutch poly V-belt pulley. Not applicable for electrical air conditioner compressor.

– Pour old refrigerant oil out of air conditioner compressor. Handling refrigerant ⇒ Volkswagen ServiceNet; Service handbook; Environmental protection; Waste disposal; Current situation; Disposal channels; Disposal of used oils; Refrigerant oils .

– Only refill with fresh refrigerant oil equivalent to volume of oil that was removed (from defective air conditioner compressor).

Note

- *If for instance 70 cm³ refrigerant oil was poured out of the defective air conditioner compressor, and 220 cm³ oil was poured out of the genuine air conditioner compressor (a small quantity of refrigerant oil remains in the air conditioner compressor), pour 70 cm³ refrigerant oil into the genuine air conditioner compressor (the refrigerant oil previously poured out of the genuine air conditioner compressor part may be used).*
- *Different air conditioner compressors require different types and quantities of refrigerant oils ⇒ Rep. gr. 87 .*
- *If a large quantity of refrigerant oil (more than about 80 cm³) was poured from the defective air conditioner compressor, the remaining refrigerant oil can also be poured into the evaporator or the reservoir or receiver ⇒ Rep. gr. 87 .*

– Replace restrictor. Depending on vehicle.

– Assemble, evacuate and charge refrigerant circuit.

15.2.2 Leaks or internal damage (e.g. noises or lack of power)

– Drain refrigerant circuit.

– Remove air conditioner compressor.

Note

- *For internal damage or leak (in or from air conditioner compressor), flush refrigerant circuit with refrigerant R134a ⇒ page 70 .*
- *If a different air conditioner compressor with other refrigerant oil is fitted, purge the refrigerant circuit with R134a refrigerant ⇒ page 70 .*

– Assemble, evacuate and charge refrigerant circuit.

15.3 Replace receiver or reservoir and restrictor

15.3.1 After flushing contaminants from refrigerant circuit, e.g. due to moisture intrusion (because refrigerant circuit was

Protected by copyright. Copying for private or commercial purposes, in part or in whole, is not permitted unless authorised by Volkswagen AG. Volkswagen AG does not guarantee or accept any liability with respect to the correctness of information in this document. Copyright by Volkswagen AG.
satelettronica

open for a longer period of time) or due to soiling

The reservoir/receiver or desiccant bag/cartridge need not be renewed under the following circumstances:

- After an accident in which there was no damage to the reservoir or receiver.
- Repairs are performed quickly (no more delay than during a normal repair time) and there was no moisture intrusion. The vehicle is no more than 5 years old.

The reservoir or receiver or dryer cartridge should be renewed under the following circumstances>

- The refrigerant circuit was opened and the vehicle is more than 5 years old.
- The refrigerant circuit has been opened for in indeterminate period (seepage leak).
- Repairs take longer than a normal repair time and there has been moisture intrusion.
- Always renew collector/reservoir or dryer cartridge after blowing through with compressed air or purging with refrigerant R134a. Keep genuine parts sealed for as long as possible to keep the ingress of moisture as low as possible.
- The air conditioner compressor seizes.
- The reservoir or receiver is damaged (e.g. in an accident).

– Drain refrigerant circuit.

– Remove air conditioner compressor.

– Rectify cause of fault.

– Renew the expansion valve.

– Drain refrigerant oil from air conditioner compressor via block connections.

– To speed up the draining of the refrigerant oil, rotate the shaft of the air conditioner compressor using the magnetic clutch poly V-belt pulley.

– Pour old refrigerant oil out of air conditioner compressor. Handling refrigerant ⇒ Volkswagen ServiceNet; Service handbook; Environmental protection; Waste disposal; Current situation; Disposal channels; Disposal of used oils; Refrigerant oils .

– Then fill the air conditioner compressor with a quantity of new refrigerant oil equal to the quantity in a genuine air conditioner compressor ⇒ Rep. gr. 87 .

Protected by copyright. Copying for private or commercial purposes, in part or in whole, is not permitted unless authorised by Volkswagen AG. Volkswagen AG does not guarantee or accept any liability with respect to the correctness of information in this document. Copyright by Volkswagen AG.
satelettronica

Protected by copyright. Copying for private or commercial purposes, in part or in whole, is not permitted unless authorised by Volkswagen AG. Volkswagen AG does not guarantee or accept any liability with respect to the correctness of information in this document. Copyright by Volkswagen AG.

Note

- *Types and quantities of refrigerant oils which should be used for different air conditioner compressors ⇒ Rep. gr. 87 .*
- *To ensure proper lubrication of the air conditioner compressor when it runs for the first time, the air conditioner compressor must be filled with at least 80 cm³ of refrigerant oil; the remainder can be poured into the new reservoir or receiver ⇒ Rep. gr. 87 .*
- *If dirt enters the air conditioner compressor whilst the refrigerant circuit is open (e.g. after an accident), the air conditioner compressor should be renewed.*

– Replace receiver or reservoir and restrictor.

– Assemble, evacuate and charge refrigerant circuit.

15.3.2 Without needing to flush contaminants from refrigerant circuit (e.g. damage in an accident); no refrigerant has escaped and no moisture or dirt has entered refrigerant circuit

– Drain refrigerant circuit.

– Replace restrictor. Depending on vehicle.

– Remove receiver or reservoir.

– Clean any dirt out of receiver or reservoir.

– Weigh removed receiver or reservoir.

Note

- *Fill enough refrigerant oil into the new reservoir or collector so that it has the same weight as the container which was removed.*
- *Install new receiver or reservoir.*

– Assemble, evacuate and charge refrigerant circuit.

satelettronica

16 Testing equipment and tools

16.1 List of test equipment, tools and materials

Note

This list is an overview of the test equipment, tools and materials necessary for professional repairs to the refrigerant circuit.

16.1.1 Tools and materials available from regional sales centre or importer

Overview	Page
Air conditioner service station	⇒ page 201
Leak detector - V.A.G 1796-	⇒ page 202
Leak detecting system - VAS 6196-	⇒ page 202
Leak detection additive - VAS 6196/1-	Not illustrated
Leak detecting system - VAS 6201- or later model	⇒ page 203
Air conditioner service station with purging device or air conditioner service station with purging device - VAS 6337- (latest available air conditioner service stations ⇒ V.A.G workshop equipment catalogue). ♦ With integrated program for purging refrigerant circuit using refrigerant R134a.	Not illustrated
Purging device for refrigerant circuits - VAS 6337/1- , (other available refrigerant circuit purging devices ⇒ V.A.G workshop equipment catalogue . ♦ For purging refrigerant circuit using refrigerant R134a. May also be used on older air conditioner service stations (purging procedure must then be carried out manually) with a reservoir volume of at least 10 kg refrigerant R134a.	⇒ page 202
Purging device for refrigerant circuits - VAS 6336/1- , (other available refrigerant circuit purging devices ⇒ V.A.G workshop equipment catalogue . ♦ For purging refrigerant circuit using refrigerant R134a. May also be used on older air conditioner service stations (purging procedure must then be carried out manually) with a reservoir volume of at least 10 kg refrigerant R134a.	⇒ page 202
Adapter case VW/Audi passenger vehicle set VAS 631 for refrigerant circuits with refrigerant R134a. ♦ For connection of air conditioner service station to refrigerant circuit and to bridge certain components during purging with refrigerant R134a or blowing through with compressed air or nitrogen.	Not illustrated

Protected by copyright. Copying for private or commercial purposes, in part or in whole, is not permitted unless authorised by Volkswagen AG. Volkswagen AG does not guarantee or accept any liability with respect to the correctness of information in this document. Copyright by Volkswagen AG.
satelettronica

Overview	Page
Adapter case commercial vehicle set - VAS 6338/50- for refrigerant circuits with refrigerant R134a. ◆ For connection of air conditioner service station to refrigerant circuit and to bridge certain components during purging or blowing through.	Not illustrated
Ultrasonic air conditioner cleaning unit - VAS 6189A- ◆ To remove unpleasant odours originating from air conditioning system.	Not illustrated
Suction feed spray-gun - V.A.G 1538- ◆ V.A.G 1538/5, probe for evaporator cleaning, short ◆ V.A.G 1538/6, probe for evaporator cleaning, long ◆ V.A.G 1538/7, probe for evaporator cleaning, 700 mm (CV) ◆ Cleaner D 600 100 A1 ◆ Cleaning solution for evaporator D 600 100 A2 ◆ To remove unpleasant odours from evaporator	Not illustrated
Release tools case - VAS 6127- ◆ To open refrigerant pipes.	⇒ page 203
Release tools - VAS 6127/1-3- ◆ To open refrigerant pipes.	⇒ page 203
Counter-hold tool - V.A.G 1616- ◆ For coupling plate (air conditioner compressor made by “Sanden”).	⇒ page 204
Puller - V.A.G 1616/1- for magnetic clutch (Sanden air conditioner compressor).	⇒ page 204
Magnetic clutch puller - V.A.G 1719- (Zexel air conditioner compressor).	⇒ page 204
Adapter set for refrigerant circuit - V.A.G 1785/1-10- R134a.	⇒ page 204
Combination fine filter unit for compressed air systems; oil, dirt and water separator as used for paint gun systems ⇒ Workshop equipment catalogue .	Not illustrated
O-ring ⇒ Parts catalogue .	Not illustrated
Refrigerant oil ⇒ Parts catalogue .	Not illustrated
Socket insert - T10364- for valves of service connections on HP/LP side of refrigerant circuit.	⇒ page 205

16.1.2 Tools and materials commercially available

Overview	Page
Fin comb	⇒ page 205
Charging hoses 5/8"-18 UNF with valve opener	⇒ page 206
Connector piece for pressure bottles for refrigerant and sealing ring with quick-release coupling or threaded connector 5/8"-18 UNF	⇒ page 206

Protected by copyright. Copyright by Volkswagen AG. Volkswagen AG does not guarantee or accept any liability with respect to the correctness of information in this document. Copying for private or commercial purposes, in part or in whole, is not permitted unless authorised by Volkswagen AG.
satelettronica

Overview	Page
Valve caps 5/8" -18 UNF	⇒ page 206
Manifold gauge with pressure limiter for nitrogen	⇒ page 206
Quick connector adapter for service connections, 2 × included with the air conditioner service station .	⇒ page 207
Open ring spanners of widths matching those of the threaded connections on the refrigerant pipes.	Not illustrated
Valve opener for charging hoses	Not illustrated
Connection nipple for tapered seal 5/8"-18 UNF	Not illustrated
Compressed air gun with rubber nozzle	Not illustrated
Hand shut-off valve 5/8" - 18 UNF	Not illustrated
Recycling bottle for refrigerant R134a	Not illustrated
Digital thermometer	Not illustrated
Safety gloves	Not illustrated
Safety glasses	Not illustrated
Refrigerant R134a with pressure bottle (contents as required)	Not illustrated
Nitrogen in pressure bottle	Not illustrated
Strap wrench (oil filter) as counterhold for poly V-belt pulley	Not illustrated

16.1.3 Tools to be made locally

Overview	Page
Charging hose with connection to workshop compressed air system	⇒ page 207

16.1.4 Tools and materials available from regional sales centre or importer

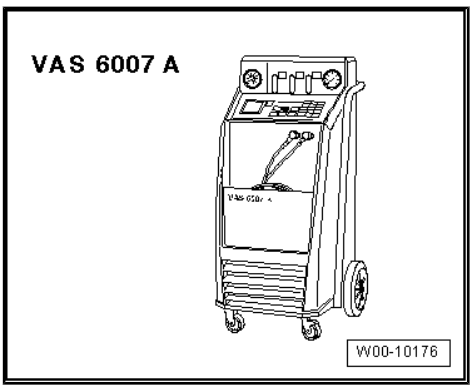

Air conditioner service station

⇒ Workshop equipment

- The procedures for testing, extracting (recycling), evacuating and charging should be carried out in accordance with the respective user's manual.
- The installed filter and dryer must be renewed at the latest at the end of the period of use specified in the operating instructions and every time that the station is emptied (keep replacement filter on hand. They can be ordered from the manufacturer of the device, see user's manual.
- Air conditioner service stations or purging devices approved by VW but not shown here may also be used.

⇒ Workshop equipment

Note

- *This air conditioner service station incorporates the following familiar individual devices: charging cylinder, manifold gauge, vacuum pump, shut-off valves and charging hoses.*
- *This air conditioner service station includes one of each type of quick-release connector (for high-pressure and low-pressure side service connections).*

Protected by copyright. Copyright by Volkswagen AG. Volkswagen AG does not guarantee or accept any liability with respect to the correctness of information in this document. Copyright by Volkswagen AG. Volkswagen AG does not permit unless authorised by Volkswagen AG, in particular not for commercial purposes, in private or commercial systems or for the purpose of making it available to third parties.
satelettronica

Purging device for refrigerant circuits - VAS 6337/1- from “Behr” or later model.

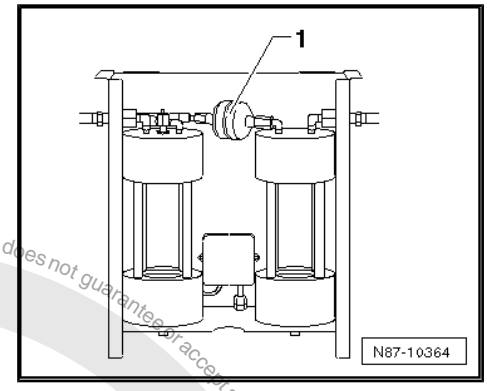

Note

- *With filter -1- and two large cylindrical sight glasses*
- *The filter in the purging device for refrigerant circuits should be changed after about 2 purging cycles (depending on the level of contamination from the purged refrigerant circuits). If a heavily contaminated refrigerant circuit is purged (the refrigerant oil from the refrigerant circuit is black and viscous or there are large amounts of shavings in the refrigerant circuit) renew filter after purging refrigerant circuit.*

Purging device for refrigerant circuits - VAS 6336/1- from “Waeco” or later model.

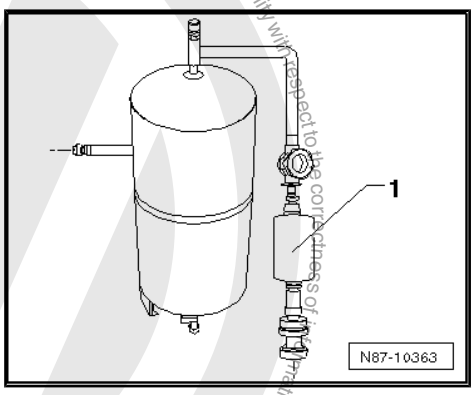

Note

- *With filter -1- and one sight glass*
- *The filter in the purging device for refrigerant circuits should be changed after about 2 purging cycles (depending on the level of contamination from the purged refrigerant circuits). If a heavily contaminated refrigerant circuit is purged (the refrigerant oil from the refrigerant circuit is black and viscous or there are large amounts of shavings in the refrigerant circuit) renew filter after purging refrigerant circuit.*

Leak detector - V.A.G 1796-

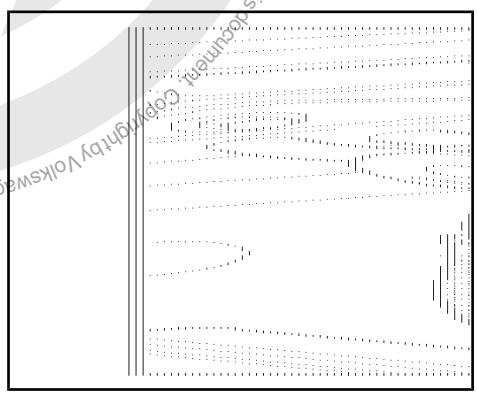

Leak detecting system - VAS 6196-

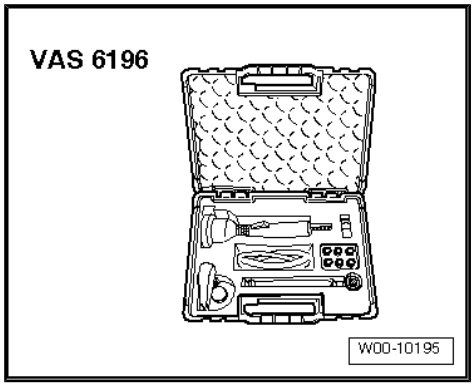

Protected by copyright. Copying for private or commercial purposes, in part or in whole, is not permitted unless authorised by Volkswagen AG. Volkswagen AG does not guarantee or accept any liability with respect to the correctness of information in this document. Copyright by Volkswagen AG.

satelettronica

Protected by copyright. Copying for private or commercial purposes, in part or in whole, is not permitted unless authorised by Volkswagen AG. Volkswagen AG does not guarantee or accept any liability with respect to the correctness of information in this document. Copyright by Volkswagen AG.

Leak detecting system - VAS 6201- or later model

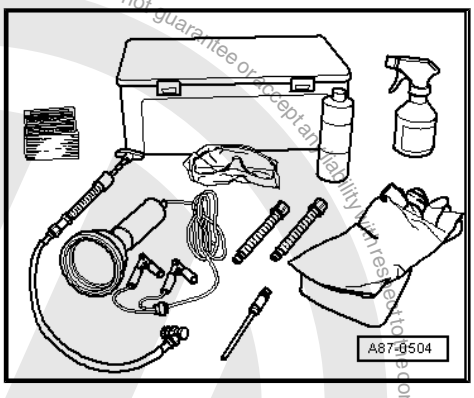

Release tool - VAS 6127- case comprising release tool - VAS 6127/1- release tool - VAS 6127/2- and release tool - VAS 6127/3-

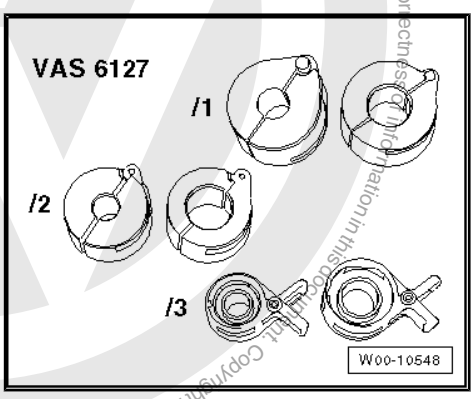

Release tool - VAS 6127/1- release tool - VAS 6127/2-

- Blue 1/2 inch
- Black 5/8 inch
- Red 3/8 inch
- White 3/4 inch

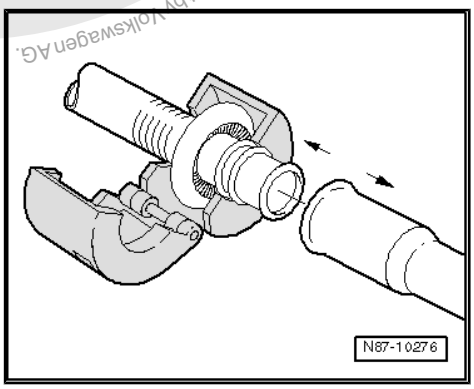

Release tool - VAS 6127/3-

- Green NW 8 for high-pressure line
- Black NW 13 for low-pressure line

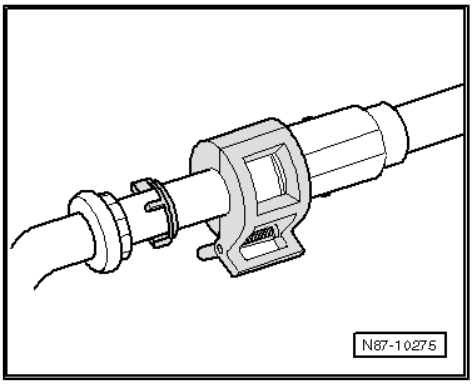

satelettronica

Counterhold - V.A.G 1616- for clutch pulley (for “Sanden” air conditioner compressors)

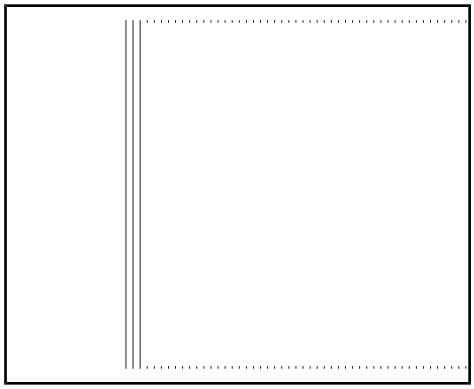

Puller - V.A.G 1616/1- for clutch pulley (for “Sanden” air conditioner compressors)

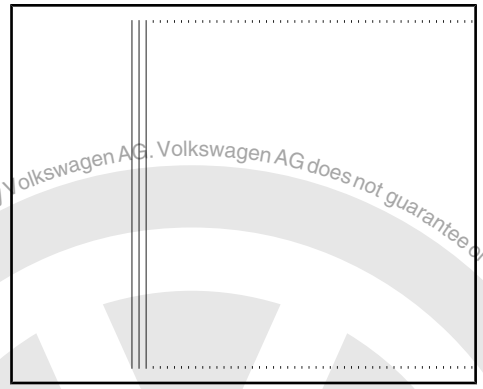

Magnetic clutch puller - V.A.G 1719- (for “Zexel” air conditioner compressors)

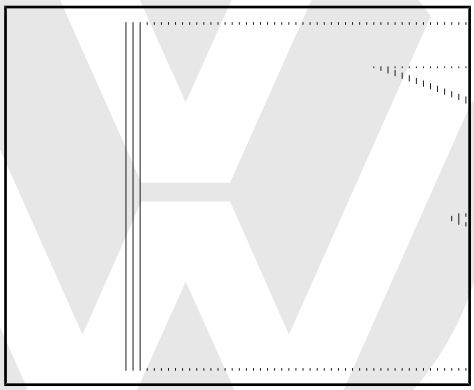

Adapter set for refrigerant circuit - V.A.G 1785/1-10-

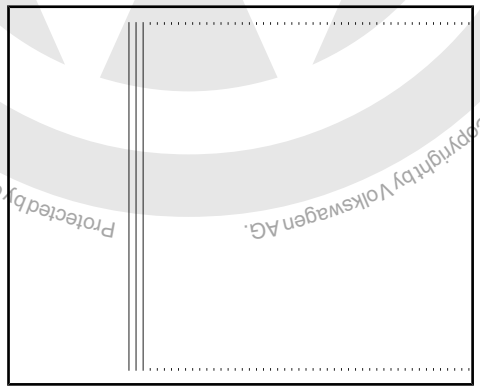

- Adapter to clean refrigerant circuit (flushing with refrigerant R134a) ⇒ page 70 or blowing through with compressed air or nitrogen ⇒ page 68

A - 5/8"-18 UNF thread for conical surface seal

B - Cap nuts (for connection with O-ring) with thread

- M 18x1.5 V.A.G 1785/1
- M 20x1.5 V.A.G 1785/2
- M 24x1.5 V.A.G 1785/3
- M 28x1.5 V.A.G 1785/4

A - 5/8"-18 UNF thread for conical surface seal

B - Threaded union for O-ring

Protected by copyright. Copyright by Volkswagen AG.
Volkswagen AG does not guarantee or accept any liability with respect to the correctness of information in this document. Copyright by Volkswagen AG.
not permitted unless authorised by Volkswagen AG.
commercial purposes, in part or in whole,
satelettronica

- M 18x1.5 V.A.G 1785/5
- M 20x1.5 V.A.G 1785/6
- M 24x1.5 V.A.G 1785/7
- M 28x1.5 V.A.G 1785/8

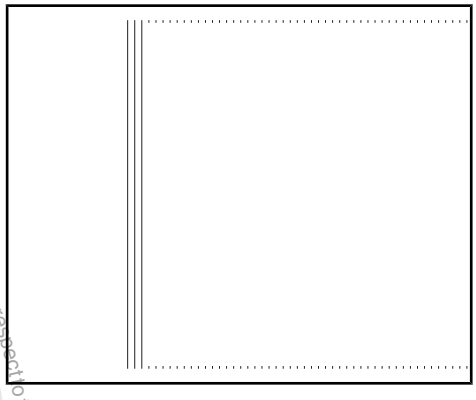

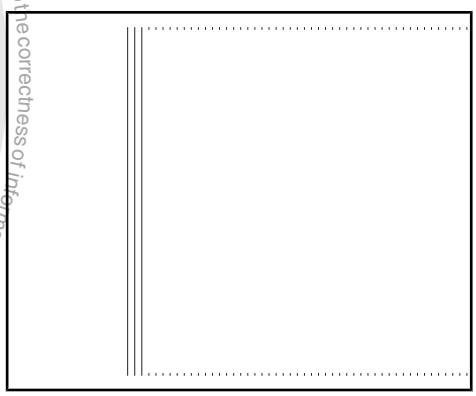

Valve adapter

A - 5/8"-18 UNF thread for conical surface seal

B - Internal thread with valve opener M 10x1.25 V.A.G 1785/9 (for connections with valves on the high-pressure side) M 12x1.5 V.A.G 1785/10 (for connections on the low-pressure side)

Note

- *There is a Schrader valve screwed into connection -A-.*
- *A valve opener must be fitted into the charging hose connection.*

Socket insert - T10364- for valves of service connections on HP/ LP side of refrigerant circuit

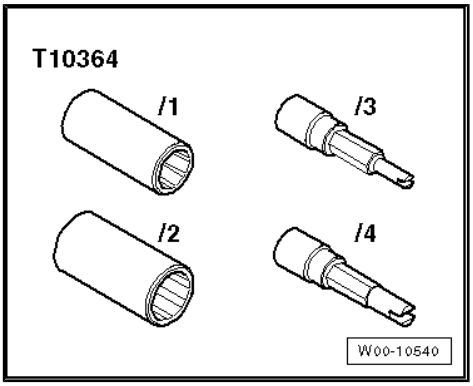

16.1.5 Tools and materials commercially available

Fin comb

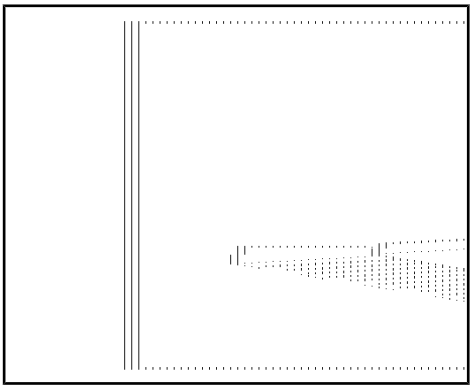

Volkswagen AG. Volkswagen AG does not guarantee or accept any liability with respect to the correctness of information in this document. Copyright Volkswagen AG. Protected by copyright. Copying for private or commercial purposes, in part or in whole, is not permitted unless authorised by Volkswagen AG.
satelettronica

Charging hoses

5/8"-18 UNF thread

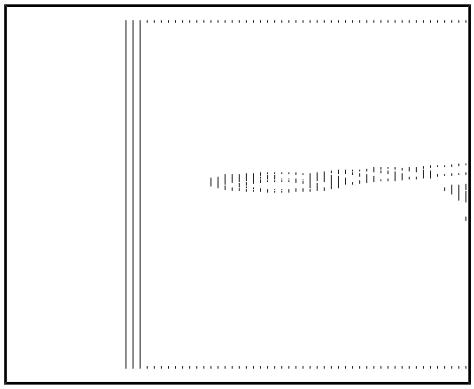

Note

- *Use charging hoses in different colours, 1800 mm long.*
- *Maintain a stock of valve openers and spare seals.*

Connector piece for pressure bottles for refrigerant with sealing ring, quick-release coupling or threaded connector 5/8"-18 UNF

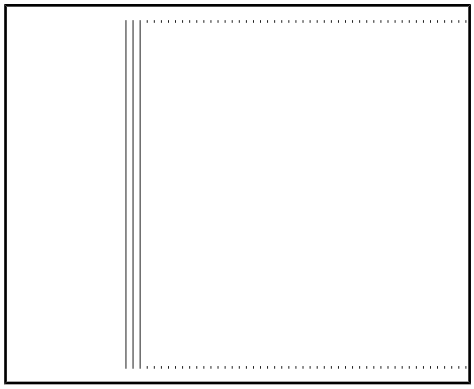

Valve caps with replacement seals (for 5/8"-18 UNF threads)

Seals can also be used for charging hoses.

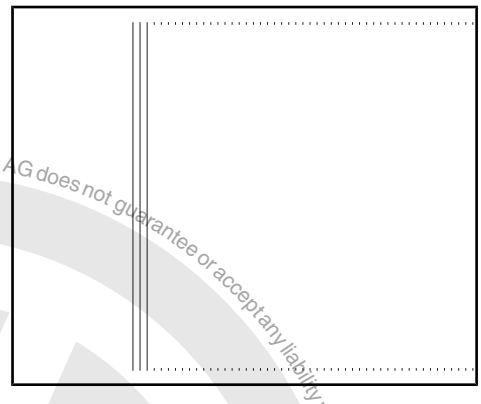

Manifold gauge with pressure reducer for nitrogen (maximum reduction pressure: 15 bar)

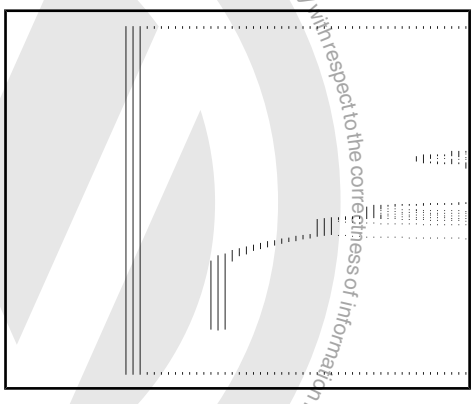

1 - Manifold gauge with pressure reducer

2 - Pressure hose (internal diameter 5 mm, length 2 m) with hose junctions

3 - Nitrogen bottle

4 - Hose fitting

Note

Hose junctions for connection to the adapter set for refrigerant circuit - V.A.G 1785- with 5/8"-18 UNF threads or quick-release coupling adapter for service connections to refrigerant circuit.

Protected by copyright. Copying for private or commercial purposes, in part or in whole, is not permitted unless authorised by Volkswagen AG. Volkswagen AG does not guarantee or accept any liability with respect to the correctness of information in this document. Copyright by Volkswagen AG.

satelettronica

Quick-release coupling adapter for service connections

- High-pressure side with nominal diameter of 16 mm
- Low-pressure side with nominal diameter 13 mm

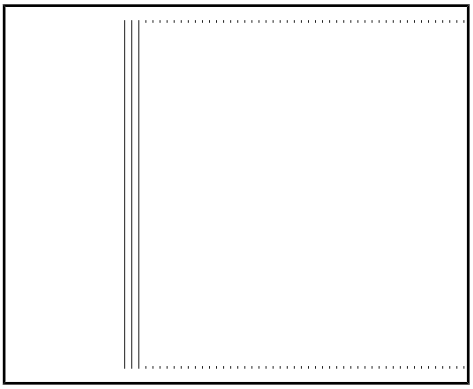

Note

These quick-release couplings are supplied with the air conditioner service station .

16.1.6 Tools to be made locally

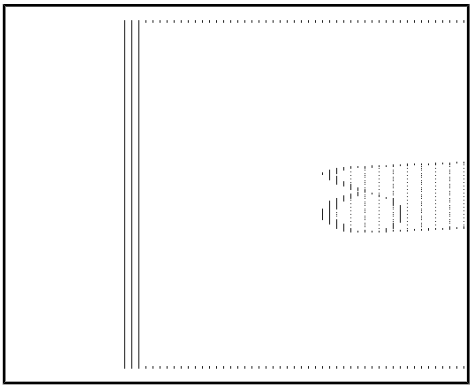

Charging hose with connection to workshop compressed air system

A - Charging hose 5/8" - 18 UNF** (version with large internal diameter)

B - Connector for workshop compressed air system** (use only with filter and dryer for compressed air)

** Tools and materials commercially available

Protected by copyright. Copying for private or commercial purposes, in part or in whole, is not permitted unless authorised by Volkswagen AG. Volkswagen AG does not guarantee or accept any liability with respect to the correctness of information in this document. Copyright by Volkswagen AG.

satelettronica